STEREO TAPE DECK

MODEL GX-265D

SECTION 1 SERVICE MANUAL 3
SECTION 2 PARTS LIST 25
SECTION 3 SCHEMATIC DIAGRAM 48

SECTION 1

SERVICE MANUAL

TABLE OF CONTENTS

I. SPECIFICATIONS 4
II. DISMANTLING OF UNIT 6
III. ARRANGEMENT OF PRINCIPAL PARTS 7
IV. MECHANISM ADJUSTMENT 8
1. POSITION ADJUSTMENT OF PINCH WHEEL SOLENOID SL-3 9
2. PINCH WHEEL POSITION ADJUSTMENT AT STOP MODE 9
3. PINCH WHEEL PRESSURE ADJUSTMENT 9
4. POSITION ADJUSTMENT OF PLAY HOLD MICROSWITCH SW-11 9
5. SLIDE ADJUSTMENT 9
6. POSITION ADJUSTMENT OF QUICK PLATE 9
7. POSITION ADJUSTMENT OF RECORDING MICROSWITCH SW-5 9
8. POSITION ADJUSTMENT OF BRAKE SOLENOID SL-2 11
9. POSITION ADJUSTMENT OF BRAKE SOLENOID MICROSWITCH SW-8 11
10. BRAKE TENSION ADJUSTMENT 11
11. PAUSE ADJUSTMENT 11
12. POSITION ADJUSTMENT OF REVERSE SOLENOID SL-1 11
13. D SWITCH LEVER ADJUSTMENT 11
14. INSTALLATION POSITION ADJUSTMENT OF REVERSE JOINT 11
15. INSTALLATION POSITION ADJUSTMENT OF HEAD SWITCH SW-3 13
16. CAPSTAN SHAFT LOOSE PLAY ADJUSTMENT 13
17. OPERATING POSITION ADJUSTMENT OF TENSION MICROSWITCH SW-14 13
18. TAPE GUIDE HEIGHT ADJUSTMENT 13
19. REEL TABLE HEIGHT ADJUSTMENT 13
V. HEAD ADJUSTMENT 14
VI. AMPLIFIER SYSTEM ADJUSTMENT 16
1. DC POWER SUPPLY VOLTAGE ADJUSTMENT 16
2. TAPE SPEED ADJUSTMENT 16
3. RECORDING AND PLAYBACK AMPLIFIER ADJUSTMENT 16
VII. DC RESISTANCE OF VARIOUS COILS 18
VIII. CLASSIFICATION OF VARIOUS P.C BOARDS 19
1. RELATION OF P.C BOARD TITLE AND NUMBER 19
2. COMPOSITION OF VARIOUS P.C BOARDS 19

For basic adjustments, measuring methods, and operating principles, refer to GENERAL OPERATING PRINCIPLES AND ADJUSTMENTS.

I. SPECIFICATIONS

An asterisk next to a figure indicates the minimum guaranteed performance.

TRACK SYSTEM		4 track 2 channel stereo/monaural system
TAPE SPEED		7-1/2 and 3-3/4 ips ±0.7% *7-1/2 ips (19 cm/sec) ±0.8% *3-3/4 ips (9.5 cm/sec) ±1.0%
WOW AND FLUTER		Less than 0.06% WRMS at 7-1/2 ips Less than 0.09% WRMS at 7-3/4 ips *Less than 0.1% RMS at 7-1/2 ips (FWD/REV) *Less than 0.15% RMS at 3-3/4 ips (FWD/REV)
TOTAL WOW AND FLUTTER		*Less than 0.1% at 7-1/2 ips (FWD/REV) *Less than 0.15% at 3-3/4 ips (FWD/REV)
FREQUENCY RESPONSE		30 to 25,000 Hz ±3 dB at 7-1/2 ips 30 to 19,000 Hz ±3 dB at 3-3/4 ips (Using AKAI LN-150-7 tape) *30 to 22,000 Hz ±3 dB at 7-1/2 ips *30 to 18,000 Hz ±3 dB at 3-3/4 ips
HARMONIC DISTORTION		Less than 0.5%
TOTAL HARMONIC DISTORTION		*Less than 1.0% at 7-1/2 ips *Less than 2.0% at 3-3/4 ips
SIGNAL TO NOISE RATIO		*Better than 50 dB
TOTAL SIGNAL TO NOISE RATIO		*Better than 47 dB
OUTPUT	LINE	*0.775V (0 dBm ±1.0 dB/0 dBm ±1.5 dB, FWD/REV)
	DIN	0.5V
	PHONE	30 mV/8 ohm At playback of a 700 Hz "0" VU pre-recorded test tape. (Output Volume at maximum)
INPUT	MIC	More than 0.25 mV/5 k ohm
	LINE	More than 70 mV/150 k ohm
	DIN	More than 3 mV At "0" VU output. (Recording Volume at maximum)
RECORDING/PLAYBACK LEVEL		*0.775V (0 dBm ±1.5 dB) FWD/REV deviation: ±1.5 dB
CROSS TALK		Better than 40 dB, stereo Better than 55 dB, monaural
ERASE RATIO		Better than 70 dB
BIAS FREQUENCY		103 kHz ±5%
BIAS LEAK		Better than −30 dB
HIGH FREQUENCY DEVIATION		Between FWD playback channels: within 3 dB Between REV playback channels: within 4 dB Between FWD and REV: within 3.5 dB At playback of an 8,000 Hz 3-3/4 ips pre-recorded test tape at 7-1/2 ips
RECORDING TIME		90 min stereo recording at 7-1/2 ips, using a 1,800 ft tape
F.FWD AND RWD TIME		Approximately 120 sec at 50 Hz, using a 1,800 ft tape
MOTOR	MAIN MOTOR	2 speed AC servo control outer rotor motor Type: SCM2-24KJ 4 pole Revolutions: 615 rpm at 7-1/2 ips (19 cm/sec) 307.5 rpm at 3-3/4 ips (9.5 cm/sec)
	REEL MOTOR	Two 6 pole eddy current outer roter motors Type: 24XO-MR Revolutions: 930 rpm at 50 Hz 1,120 rpm at 60 Hz

HEAD	RECORDING/ERASE COMBINATION HEAD	Type: RE4-6 Gap: REC HEAD: 4 microns ERASE HEAD; double gap Impedance: REC HEAD; 1,400 ohm ±25% at 100 kHz ERASE HEAD; 130 ohm ±7% at 100 kHz DC Resistance: REC HEAD; 5.5 ohm ERASE HEAD; 1.8 ohm
	PLAYBACK HEAD	Type: P4-202 Gap: 1.7 ±0.5 microns Impedance: 1,400 ohm at 1 kHz DC Resistance: 268 ohm
REVERSING TIME		5 to 6 sec at 7-1/2 ips (muting interval)
TRANSISTOR		2SA564(Q)(R) . . . 1 2SC458LG(C) . . . 14 2SC945(P)(Q)(R) . . . 18 2SC945L(Q)(R) . . . . 1 2SC1211(D)(E) . . . 2 2SD361(D1)(D2) . . . 2 TIP48 1
DIODE		1N34A . . . 2 1N4001 . . . 4 1N4003 . . . 5 1S1588 . . . 1 1S2473 . . . 1 1S2473VE . . . 6 10D2 . . . 4 10D4 . . . 1 RD5A(M) . . . 1
POWER REQUIREMENTS AND CONSUMPTION		100 to 240V AC 50/60 Hz, 90W (Universal models) 240V AC 50 Hz, 90W (BSI Models) 220V AC 50 Hz, 90W (CEE Models) 120V AC 60 Hz, 90W (CSA Models) 100V AC 50/60 Hz, 60/65W (JPN Models)
DIMENSIONS		440(W)x404(H)x208(D) mm (17.3"x15.9"x8.2") Dimensions include all protruding parts.
WEIGHT		16.6 kg (36.5 lbs)

NOTE: **1. Specifications determined with SCOTCH #211 tape unless otherwise noted.**
2. Specifications subject to change without notice.

II. DISMANTLING OF UNIT

In case of trouble, etc. necessitating disassembly, please disassemble in the order shown in photographs. Reassemble in reverse order.

1

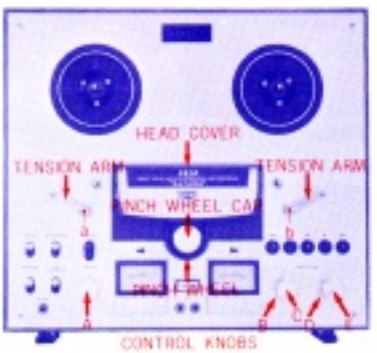

2

3

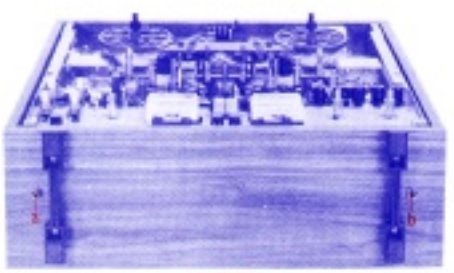

4

5

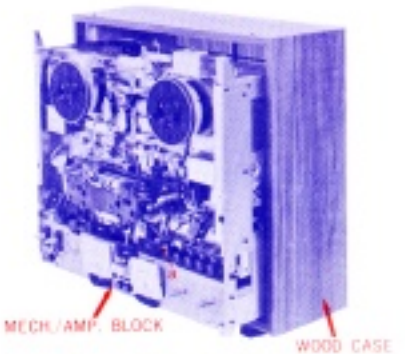

6

7

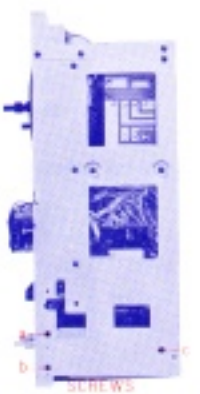

8

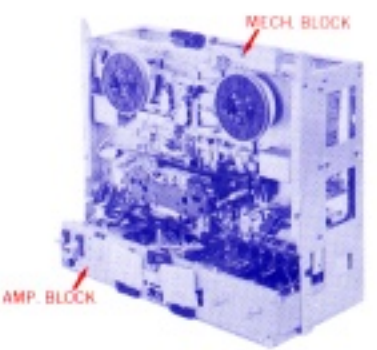

III. ARRANGMENT OF PRINCIPAL PARTS

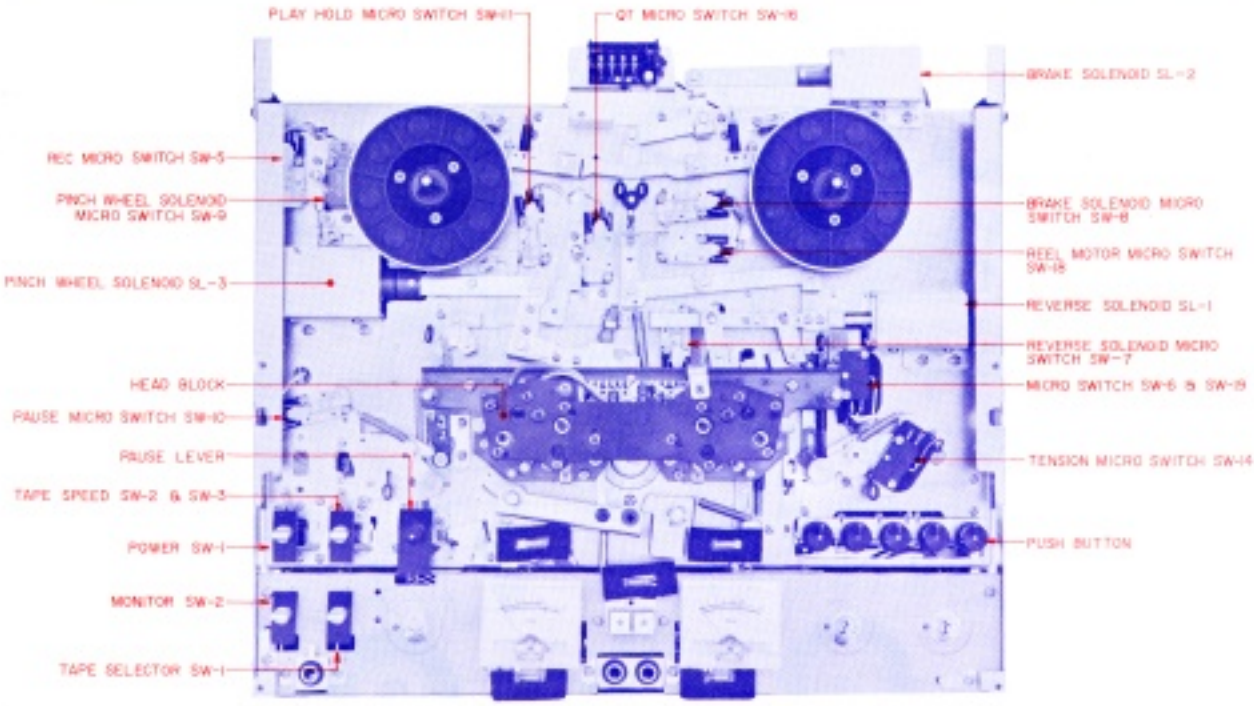

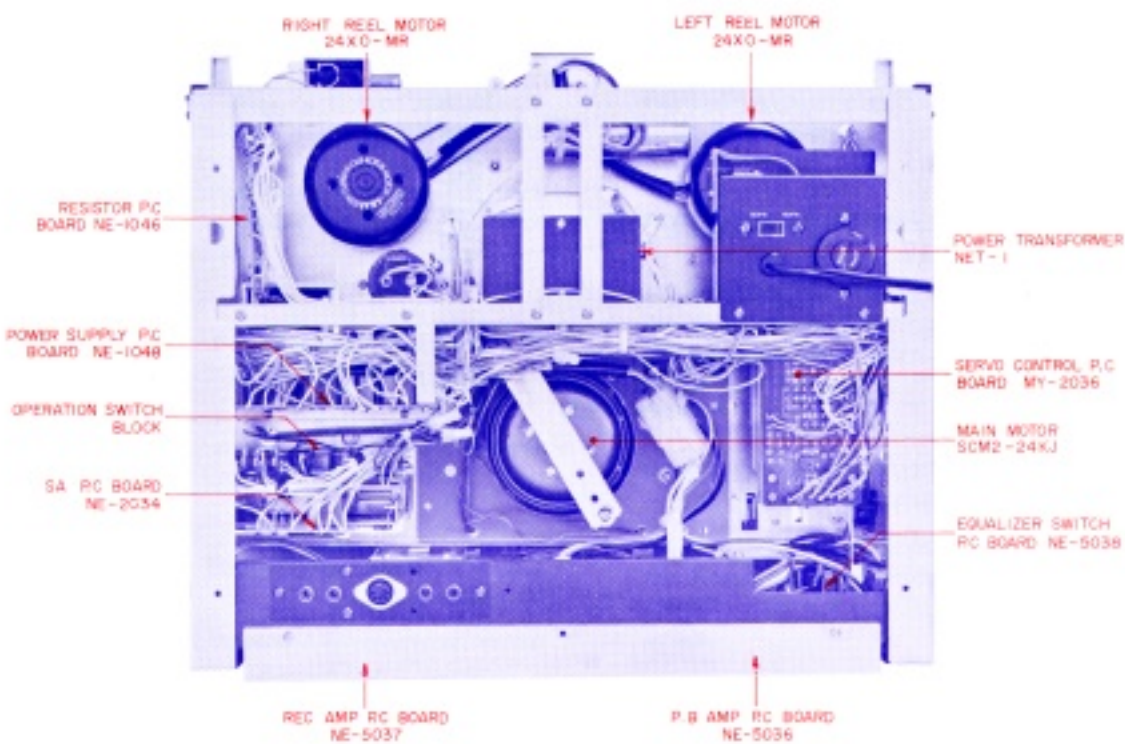

IV. MECHANISM ADJUSTMENT

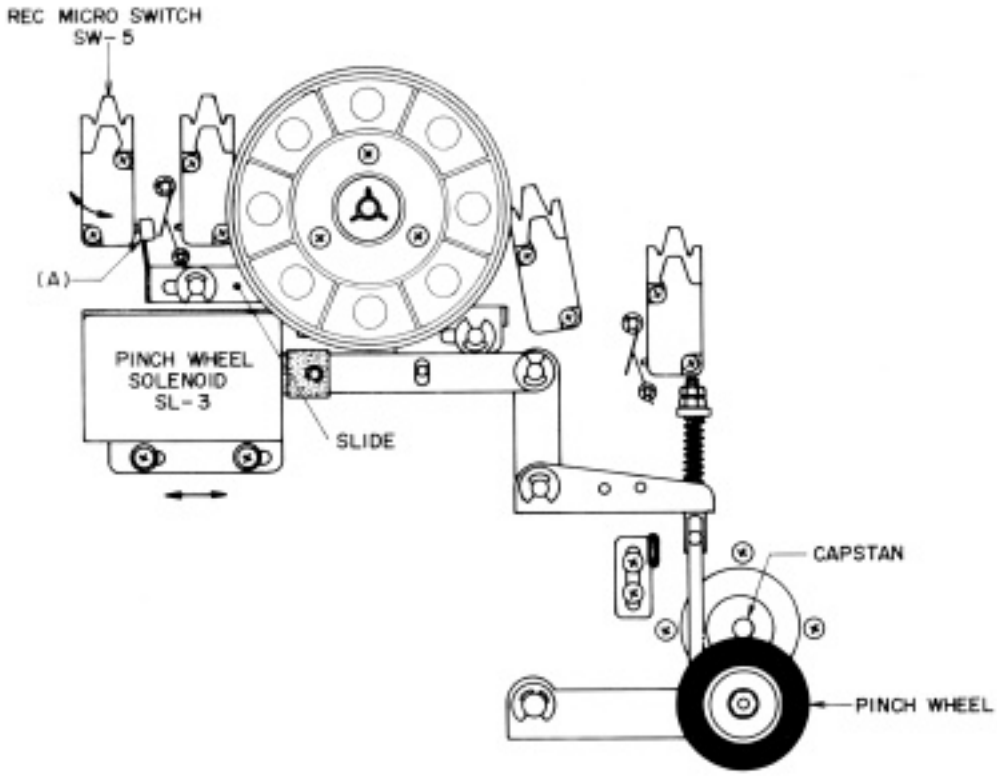

Fig. 1

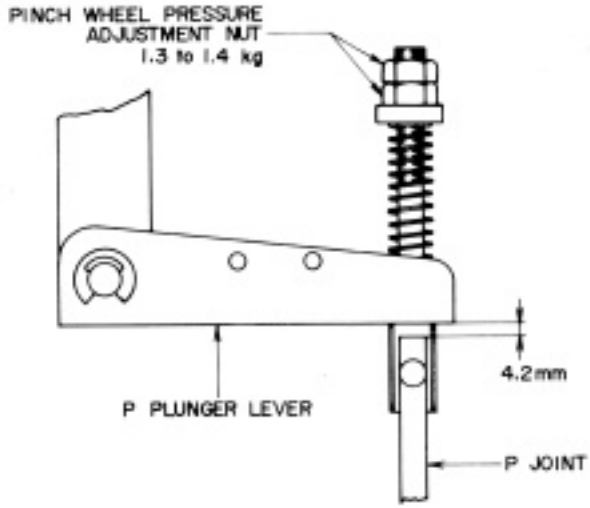

Fig. 2

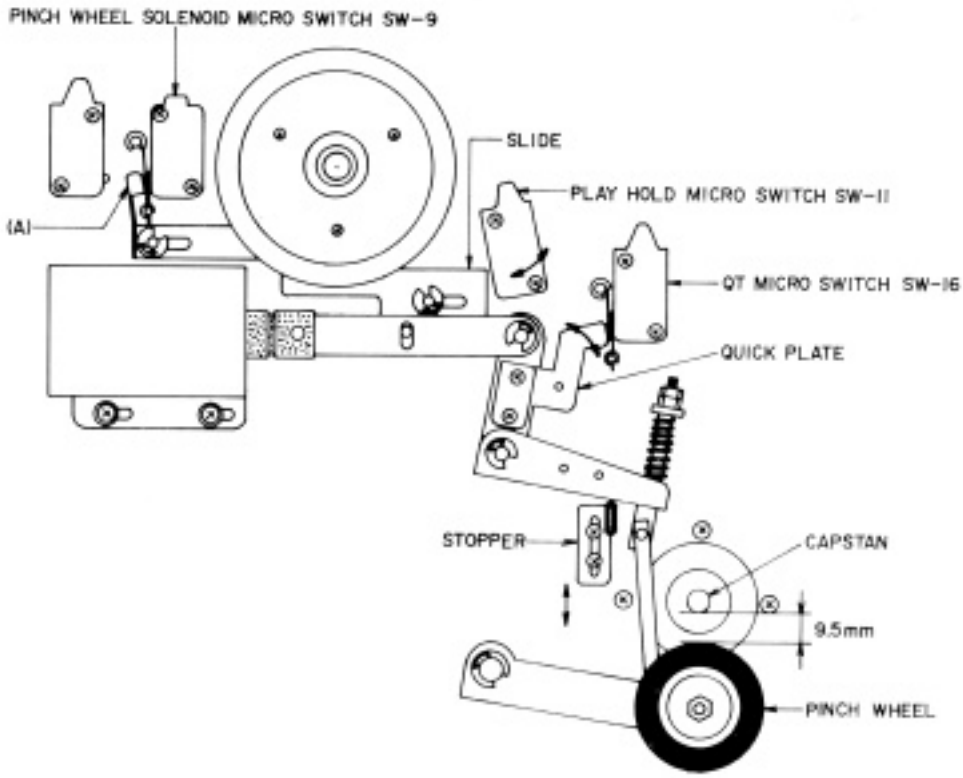

Fig. 3

1. POSITION ADJUSTMENT OF PINCH WHEEL SOLENOID SL-3 (Refer to Fig. 1)

1) Remove head block.
2) Insert a 4.2 mm gauge (a U type washer etc.) between the P Plunger Lever and P Joint (Refer to Fig. 2).
3) Set the deck to playback mode and fix Pinch Wheel Solenoid at position at which the pinch wheel begins to rotate.

2. PINCH WHEEL POSITION ADJUSTMENT AT STOP MODE (Refer to Fig. 3)

1) Remove head block.
2) Adjust Stopper so that the clearance between Pinch Wheel and Capstan Shaft is 9.5 mm.

3. PINCH WHEEL PRESSURE ADJUSTMENT (Refer to Fig. 2)

Adjust Pinch Wheel Pressure Adjustment Nut so that pinch wheel pressure is 1.3 to 1.4 kg.

4. POSITION ADJUSTMENT OF PLAY HOLD MICROSWITCH SW-11 (Refer to Fig. 3)

Adjust Play Hold Microswitch position so that at stop mode, the Play Hold Microswitch operates properly and the Slide does not contact the body of the microswitch.

5. SLIDE ADJUSTMENT (Refer to Fig. 3)

Adjust part (A) of the Slide so that at stop mode, the Pinch Wheel Solenoid Microswitch operates properly, and part (A) does not strongly hit against the body of the microswitch.

6. POSITION ADJUSTMENT OF QUICK PLATE (Refe to Fig. 3)

Adjust Quick Plate position so that at stop mode, the Quick Tension Microswitch operates properly, and the Quick Plate does not strongly hit against the body of the microswitch.

7. POSITION ADJUSTMENT OF RECORDING MICROSWITCH SW-5 (Refer to Fig. 1)

Adjust part (A) of the Slide so that at playback mode the Recording Microswitch operates properly, and part (A) does not contact the body of the microswitch.

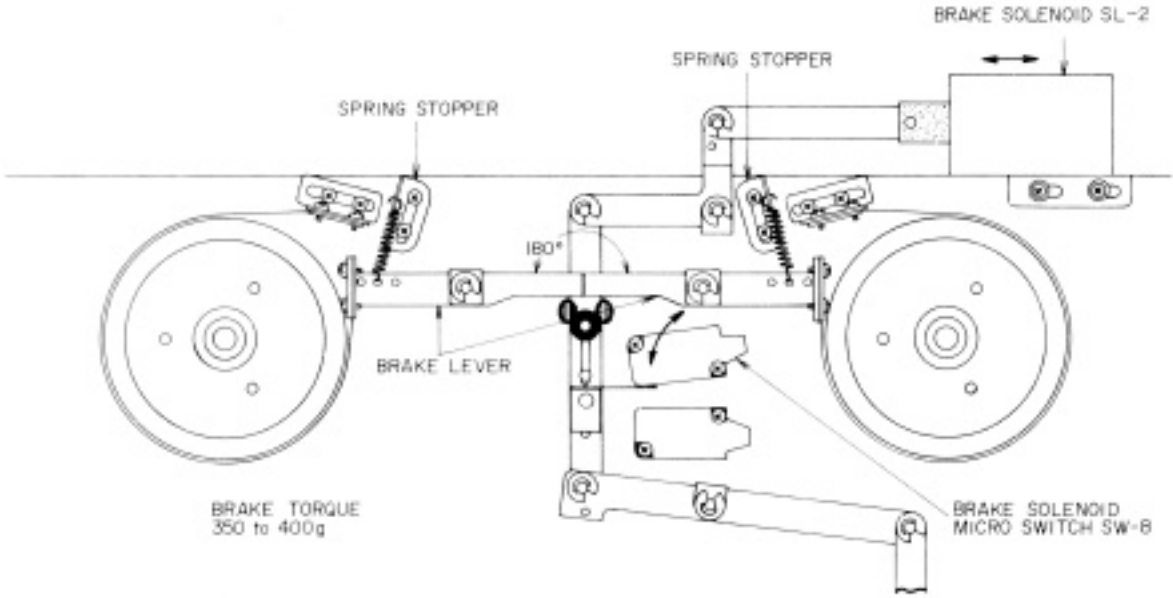
BRAKE SOLENOID SL-2
SPRING STOPPER
SPRING STOPPER
180°
BRAKE LEVER
BRAKE TORQUE
350 to 400g
BRAKE SOLENOID
MICRO SWITCH SW-8

Fig. 4

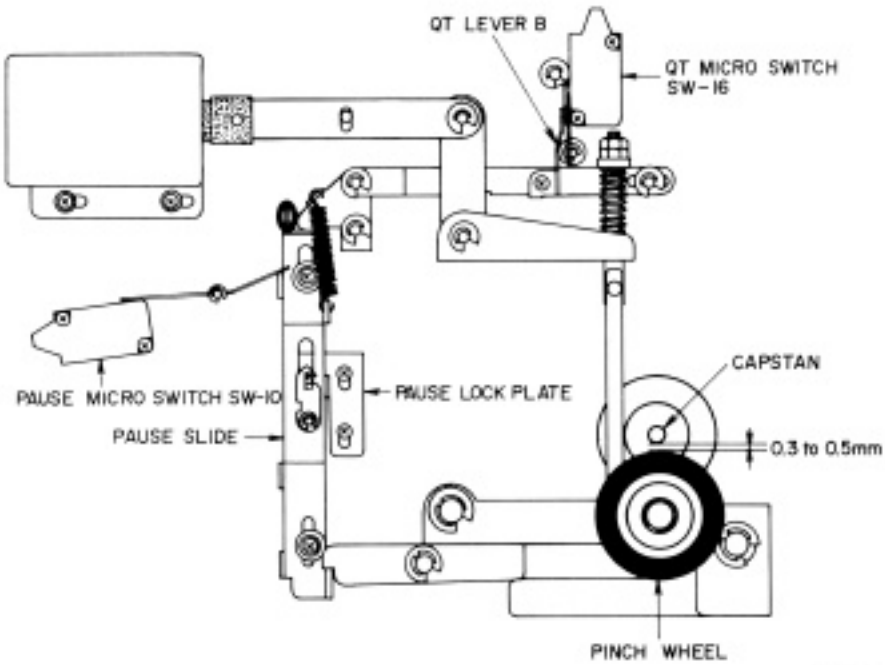
QT LEVER B
QT MICRO SWITCH
SW-16
CAPSTAN
PAUSE MICRO SWITCH SW-10
PAUSE LOCK PLATE
PAUSE SLIDE
0.3 to 0.5mm
PINCH WHEEL

Fig. 5

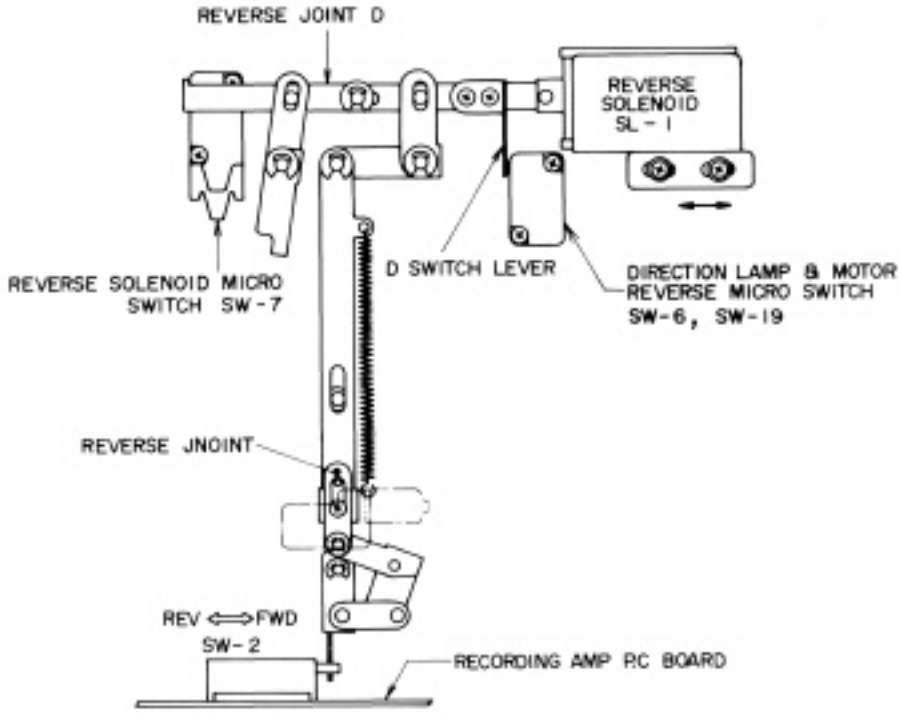

Fig. 6

8. POSITION ADJUSTMENT OF BRAKE SOLENOID SL-2 (Refer to Fig. 4)

Set the deck to playback mode, and fix Brake Solenoid at position at which the left and right brake levers display 180° angle relativity.

9. POSITION ADJUSTMENT OF BRAKE SOLENOID MICROSWITCH SW-8 (Refer to Fig. 4)

Set the deck to playback mode, and adjust Brake Solenoid Microswitch position so that the microswitch operates properly.

10. BRAKE TENSION ADJUSTMENT (Refer to Fig. 4)

Adjust Spring Stopper position so that the brake tension is 350 to 400g.

11. PAUSE ADJUSTMENT (Refer to Fig. 5)

1) At playback mode, lock Pause Lever.
2) Adjust Pause Lock Plate position to obtain a 0.3 to 0.5 mm clearance between Pinch Wheel and Capstan.
3) When making this adjustment, be careful that the clearance between Pinch Wheel and Capstan does not exceed 0.5 mm.
4) Confirm that the Quick Tension Microswitch is pushed when the Pause Lever is depressed and if not, adjust with QT Lever B.

12. POSITION ADJUSTMENT OF REVERSE SOLENOID SL-1 (Refer to Fig. 6)

1) Set the deck to reverse mode, and adjust Reverse Solenoid position so that Reverse Joint D activates the Reverse Solenoid Microswitch.
2) At this time, be careful that Reverse Joint D does not contact the body of the microswitch.

13. D SWITCH LEVER ADJUSTMENT (Refer to Fig. 6)

Set the deck to reverse mode, and adjust D Switch Lever so that the lever activates the Direction Indicator Lamp and Reel Motor Torque Conversion Microswitches.

14. INSTALLATION POSITION ADJUSTMENT OF REVERSE JOINT (Refer to Fig. 6)

Adjust Reverse Joint installation position so that when the deck is set to reverse mode, FWD⟷REV Slide Switch of Recording Amp P.C Board (NE-5037) is completely depressed.

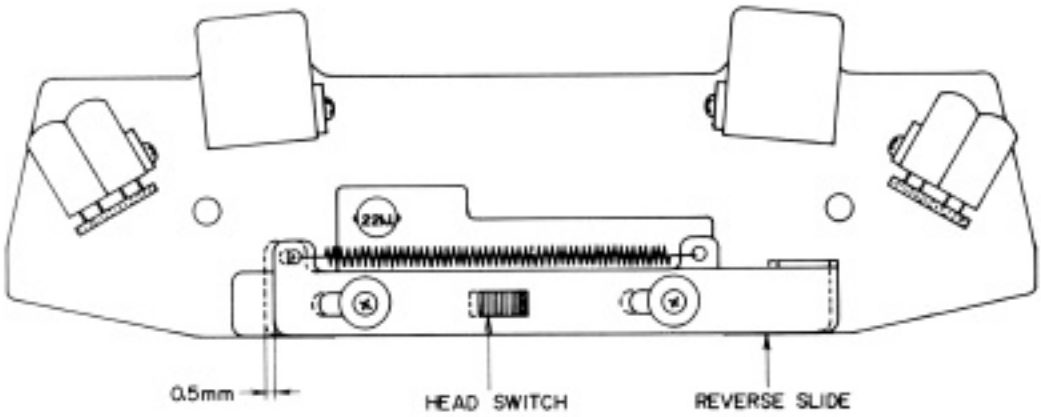

Fig. 7

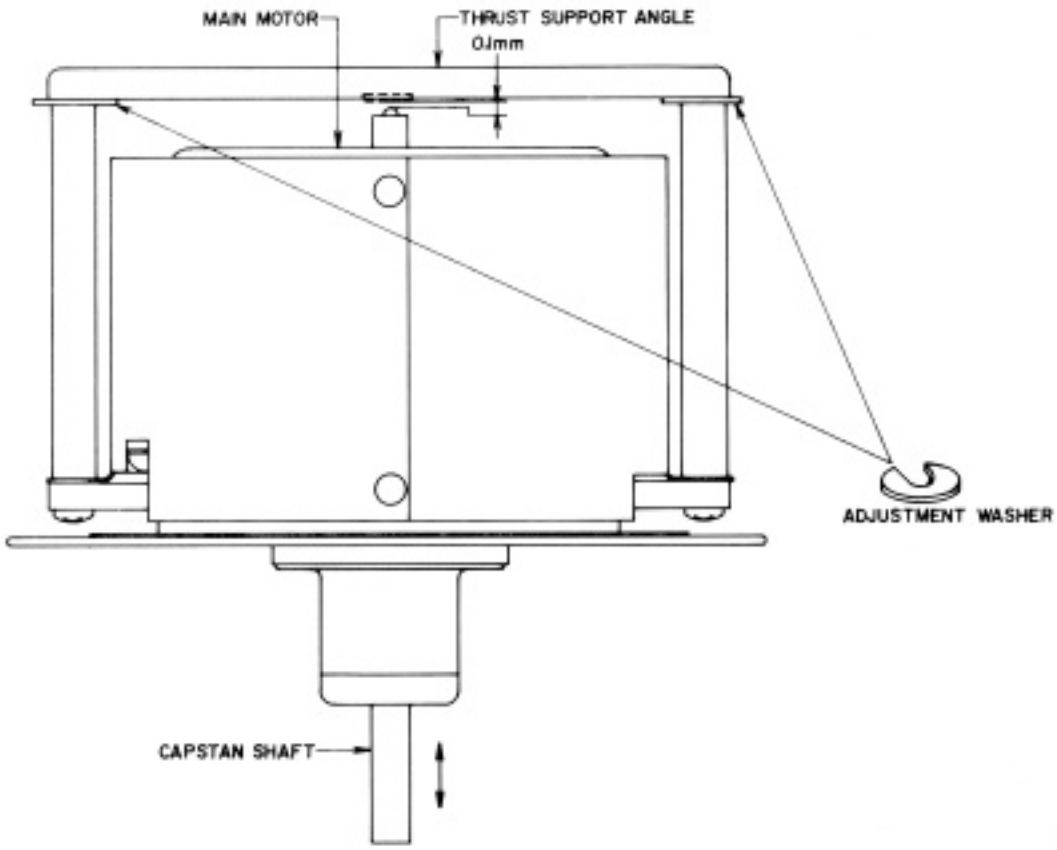

Fig. 8

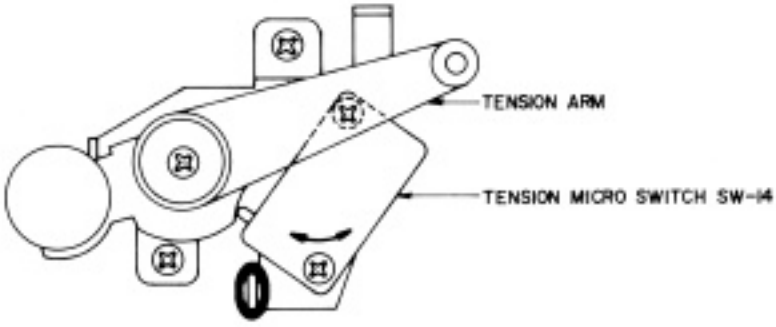

Fig. 9

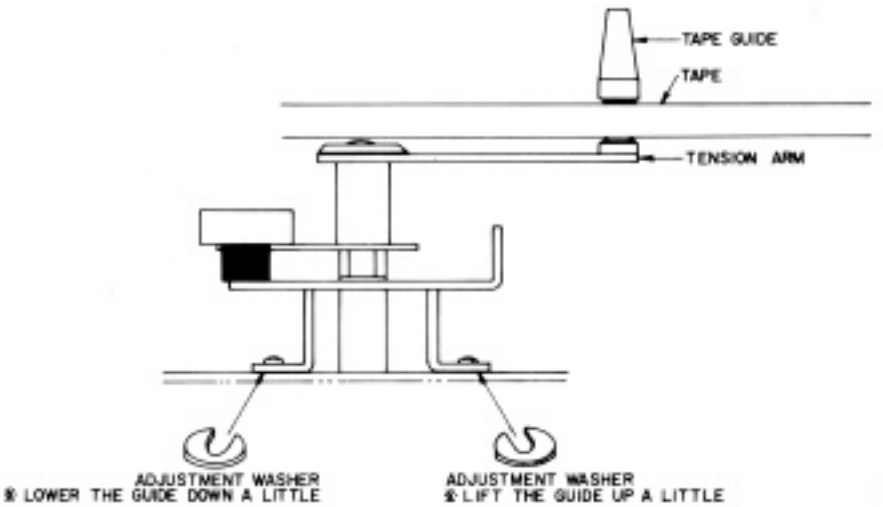

Fig. 10

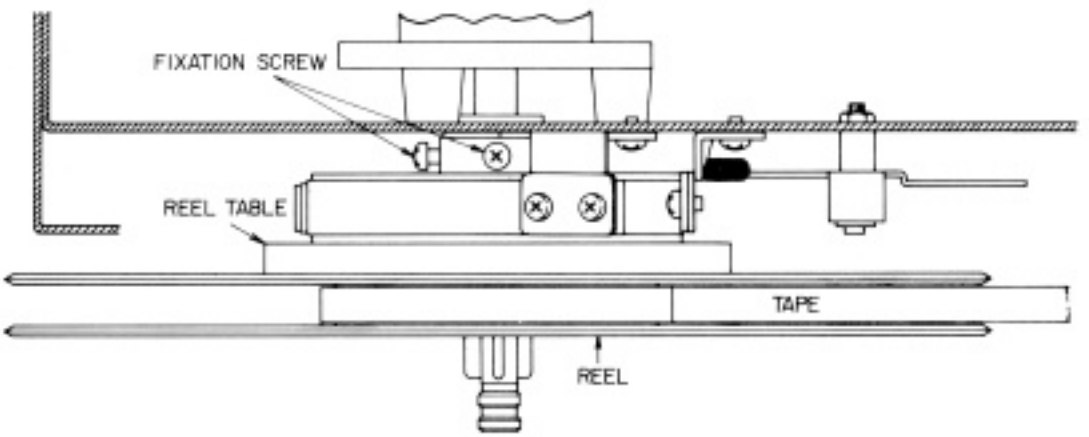

Fig. 11

15. INSTALLATION POSITION ADJUSTMENT OF HEAD SWITCH SW-3 (Refer to Figs. 7 and 12)

Adjust Head Switch installation position so that when the deck is set to reverse mode, the head switch which is mounted on the head block switches to the reverse side and that the reverse slide scope is about 0.5 mm.

16. CAPSTAN SHAFT LOOSE PLAY ADJUSTMENT (Refer to Fig. 8)

Adjust to obtain a clearance of about 0.1 mm between the capstan shaft and thrust support angle.

17. OPERATING POSITION ADJUSTMENT OF TENSION MICROSWITCH SW-14 (Refer to Fig. 9)

Adjust Tension Microswitch position so that when the Tension Arm drops, the microswitch operates perfectly to effect stop mode.

18. TAPE GUIDE HEIGHT ADJUSTMENT (Refer to Fig. 10)

1) Adjust Tape Guide height so that the tape does not curl between tape guides on Head Base.
2) In case the tape guide is low, adjust by inserting a U Type Washer on the right side in Fig. 10, and in case it is high, adjust by inserting a washer on the left side.

19. REEL TABLE HEIGHT ADJUSTMENT (Refer to Fig. 11)

1) Load a tape and set the deck to F.FWD and REV modes. Adjust Reel Table height so that the tape winds on the center of the reels at both modes.
2) Tape should wind on center of reel regardless of type of reel used.

V. HEAD ADJUSTMENT

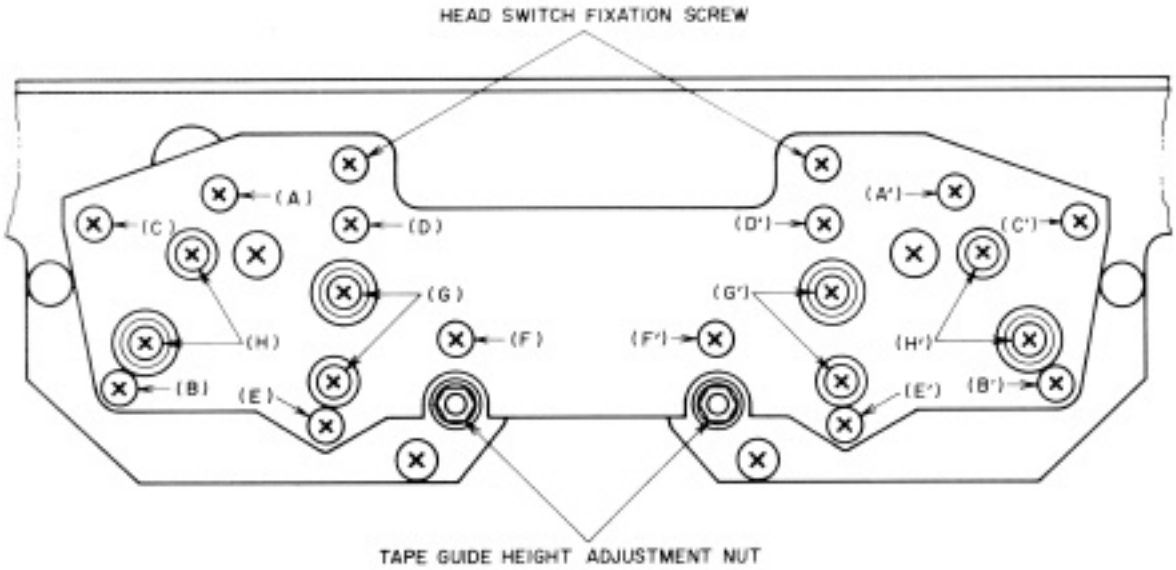

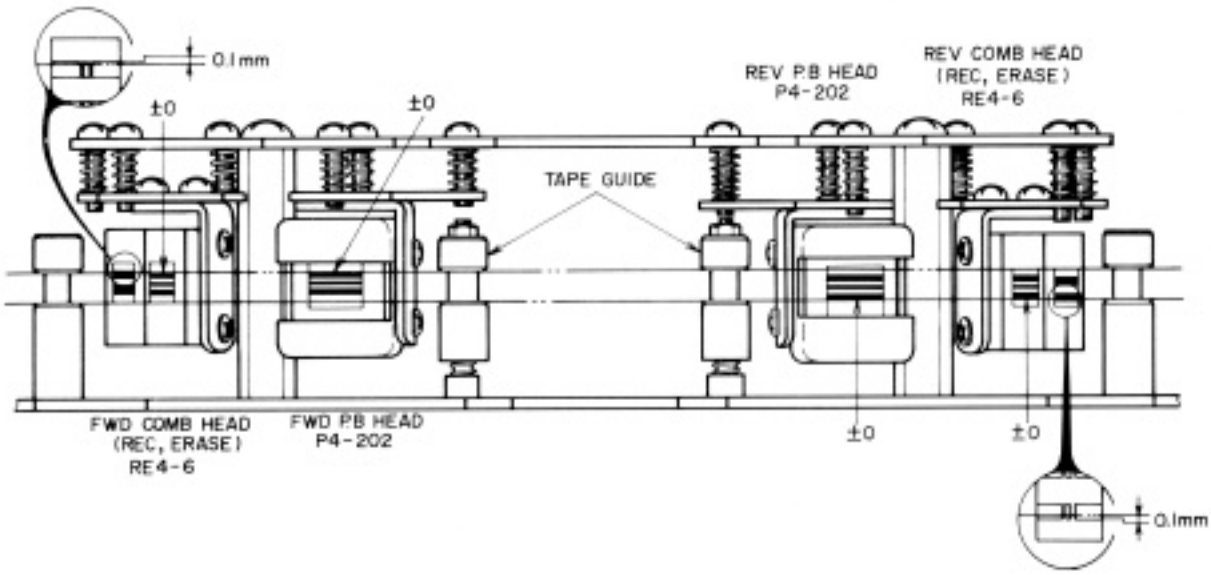

Fig. 12

Step	Adjustment Item	Test Tape Supply Signal	Mode	Adjustment Point	Remarks
1	Tape Guide Height Adjustment	Optional	FWD	Tape Guide Height Adjustment Nut	1) Adjust so that tape travels smoothly and does not twist. 2) Do not thread tape over tension arm.
2	FWD Comb Head Height Adjustment	Optional	FWD	(A)(B)(C)	Upper edges of channel 1 head core and tape are the same height.
3	FWD Playback Head Height Adjustment	Optional	FWD	(D)(E)(F)	Upper edges of channel 1 head core and tape are the same height.
4	FWD Playback Head Azimuth Alignment Adjustment	8,000 Hz 3-3/4 ips Test Tape	FWD	(F)	Maximum output, both channels.
5	FWD Playback Head Gap Alignment Adjustment	8,000 Hz 3-3/4 ips Test Tape	FWD	(G)	Adjust head gap surface so that there is no change in output level when tension is applied to the supply reel side.
6	FWD Comb Head Azimuth Alignment Adjustment	Scoth #211 Tape, 15,000Hz -20 dBm	REC	(C)	Maximum output, both channels.
7	FWD Comb Head Gap Alignment Adjustment	Scoth #211 Tape, 15,000Hz -20 dBm	REC	(H)	Adjust head gap surface so that there is no change in output level when tension is applied to the supply reel side.

Chart 1

NOTES:
1) As perfect head adjustments are vital to tape deck performance, be sure that these adjustments are carried out properly.
2) Be careful not to use a magnetized driver or other magnetized tools in the vicinity of the heads.
3) Use only new tape as level variation is likely to occur when using old tape.
4) Demagnetize heads with head demagnetizer before and after head adjusmtent.
5) Set tape speed to 7-1/2 ips except in steps 6 and 7.
6) Adjustments outlined in Chart 1 are only for FWD side heads. However, adjustments for REV side heads are exactly the same.

VI. AMPLIFIER SYSTEM ADJUSTMENT

1. DC POWER SUPPLY VOLTAGE ADJUSTMENT (Refer to Fig. 13)

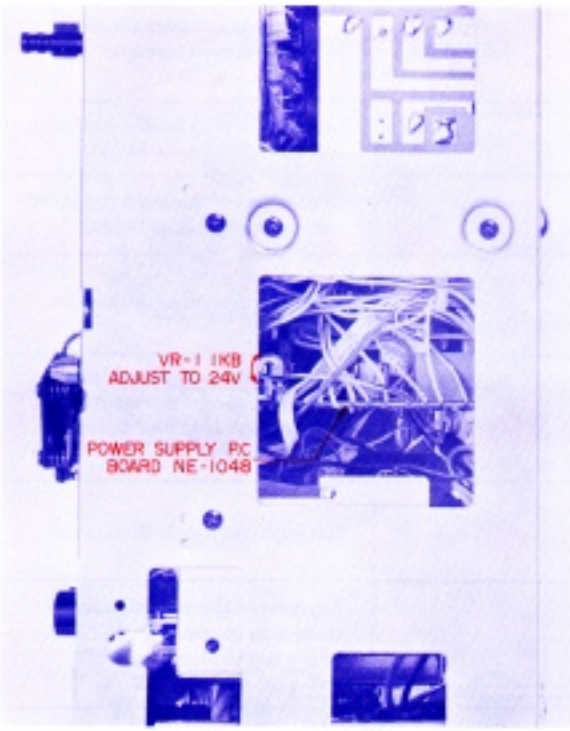

Fig. 13

2. TAPE SPEED ADJUSTMENT (Refer to Fig. 14)

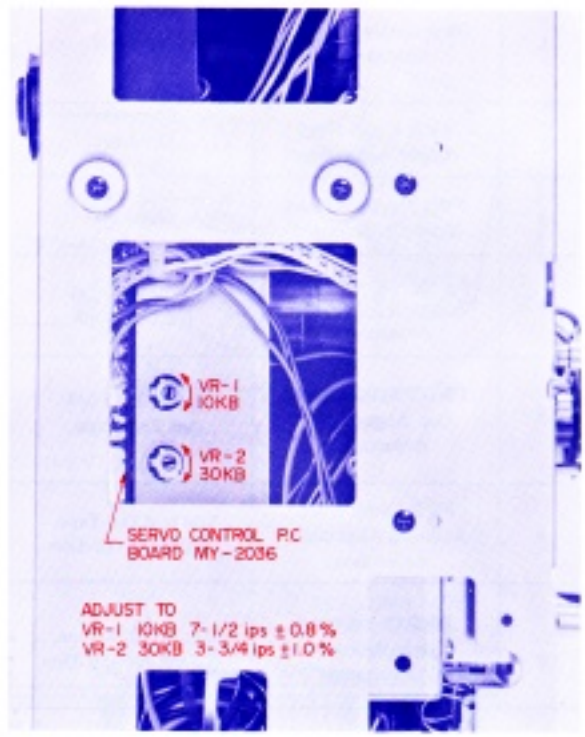

Fig. 14

3. RECORDING AND PLAYBACK AMPLIFIER ADJUSTMENT (Refer to Fig. 15)

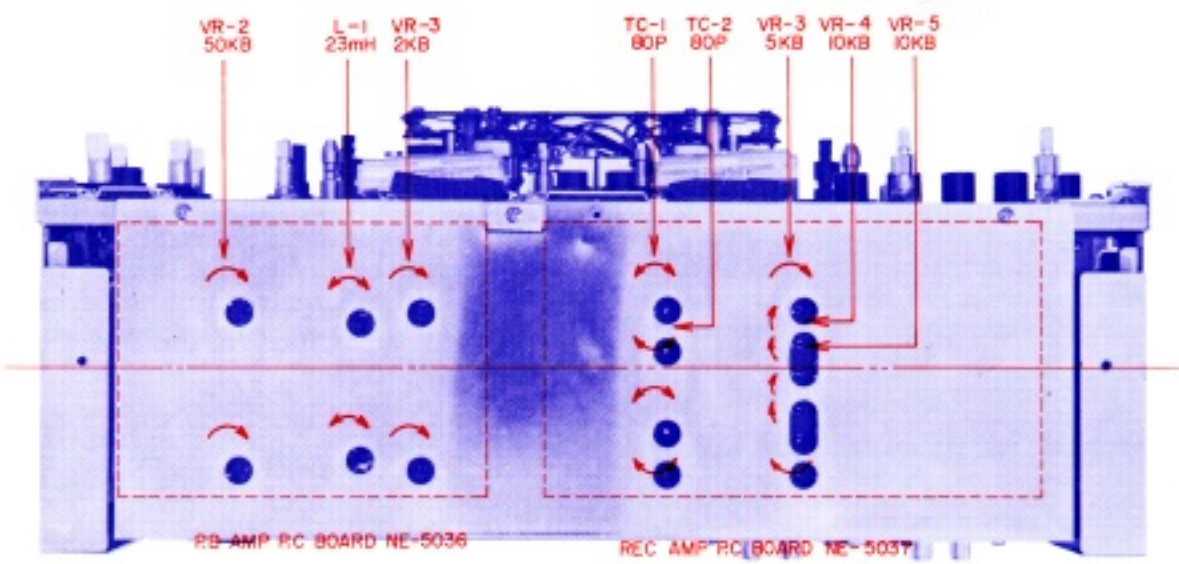

Fig. 15

Step	Adjustment Item	Test Tape Supply Signal	Mode	Adjustment Point	Result	Remarks
1	Playback Level Adjustm ent	700 Hz 7-1/2 ips 0 VU Test Tape	FWD	VR-2 50 kB	0±1.0 dB (0.775V)	Within 0 ±1.5 dB at Reverse mode.
2	VU Meter Sensitivity Adjustment	700 Hz 7-1/2 ips 0 VU Test Tape	FWD	VR-3 2 kB	0 VU	
3	Monitor Level Adjustment	1,000 Hz -20 dBm	STOP	VR-3 5 kB	0 dBm (0 VU)	Line REC Volume maximum. Monitor Switch "SOURCE".
4	FWD Recording Level Adjustment	Scotch #211 Tape 1,000 Hz 0 VU recording	FWD-REC	VR-5 20 kB	0±1.5 dB (0.775V)	Monitor Switch "TAPE".
5	REV Recording Level Adjustment	Scotch #211 Tape 1,000 Hz 0 VU recording	REV-REC	VR-4 20 kB	0±1.5 dB (0.775V)	Monitor Switch "TAPE".
6	FWD Frequency Response Adjustment	Scotch #211 Tape 1,000 Hz, 10,000 Hz -20 VU recording	FWD-REC	TC-2 80P	1,000 Hz, 10,000 Hz flat	Tape Speed 3-3/4 ips. Recheck Recording Level.
7	REV Frequency Response Adjustment	Scotch #211 Tape 1,000 Hz, 10,000 Hz -20 VU recording	REV-REC	TC-1 80P	1,000 Hz, 10,000 Hz flat	Tape Speed 3-3/4 ips. Recheck Recording Level.
8	Bias Leak Adjustment		REC	L-1 23 mH	Less than -30 dB	

Chart 2

NOTES:
1) Set tape speed to 7-1/2 ips except in Steps 6 and 7.
2) Tape Selector at "LOW NOISE".
3) Monitor Switch at "TAPE" except in Step 3.
4) Output Volume at maximum.
5) New test tape should be used.
6) Adjustment of step 8 made from the face side of Playback Amp P.C Board.
7) The letter b following an adjustment part number indicates "Right Channel".

VII. DC RESISTANCE OF VARIOUS COILS

Part	Designation	DC Resistance
Main Motor	SCM2-24KJ	Between BLU-RED: 100 ohm Between YLW-GRN: 180 ohm Pick-up Coil: 635 ohm
Reel Motor	24XO-MR	Between BLU-RED: 74 ohm Between YLW-GRN: 1,660 ohm
Pinch Wheel Solenoid	1660 PTHT3	700 ohm
Brake Solenoid	1240 PHT	590 ohm
Reverse Solenoid	1240 PHT-I	370 ohm ±10%
Reverse Relay	MY4-O-US-AD4 DC24V	650 ohm
Headphone Output Transformer	N16-535S	Primary: 565 ohm ±15% Secondary: 0.95 ohm ±15%
Oscillator Coil	OT-204	Between 1-3: 0.3 ohm Between 4-6: 0.7 ohm Between 7-9: 8.2 ohm
Playback Head	P4-202	268 ohm
Recording/Erase Combination Head	RE4-6	Recording: 5.5 ohm Erase: 1.8 ohm

Chart 3

NOTE: The resistance values shown in this chart are average values.

VIII. CLASSIFICATION OF VARIOUS P. C BOARDS

1. RELATION OF P.C BOARD TITLE AND NUMBER

P.C Board Title	P.C Board Number
Resistor P.C Bord	NE-1046
Direction Indicator Lamp P.C Board	NE-1047
Power Supply P.C Board	NE-1048
SA P.C Board	NE-2034
Playback Amp P.C Board	NE-5036
Recording Amp P.C Board	NE-5037
Equalizer Switch P.C Board	NE-5038
Servo-Control P.C Board	MY-2036
Transistor P.C Board	MY-2054

Chart 4

2. COMPOSITION OF VARIOUS P.C BOARDS

1) P.B AMP P.C BOARD (NE-5036)

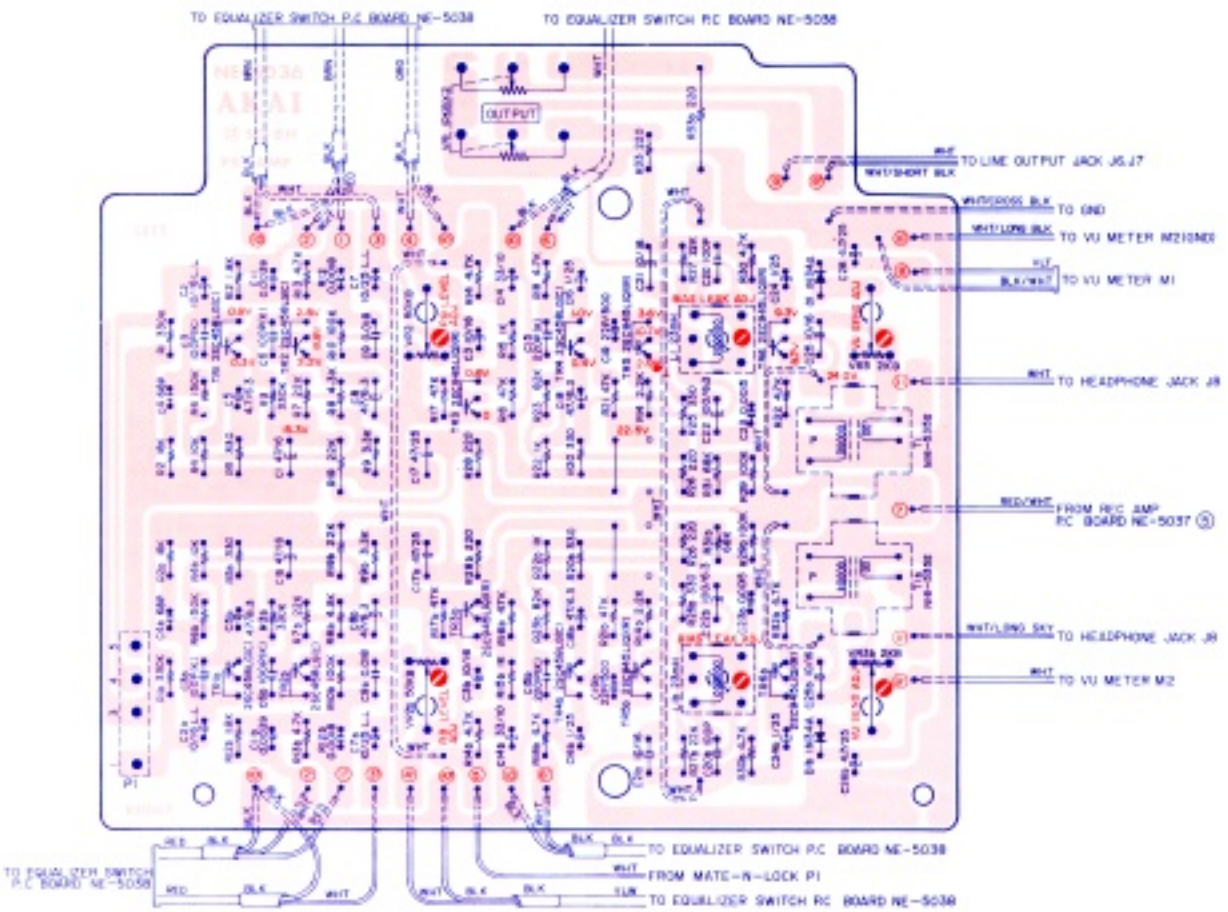

2) REC AMP P.C BOARD (NE-5037)

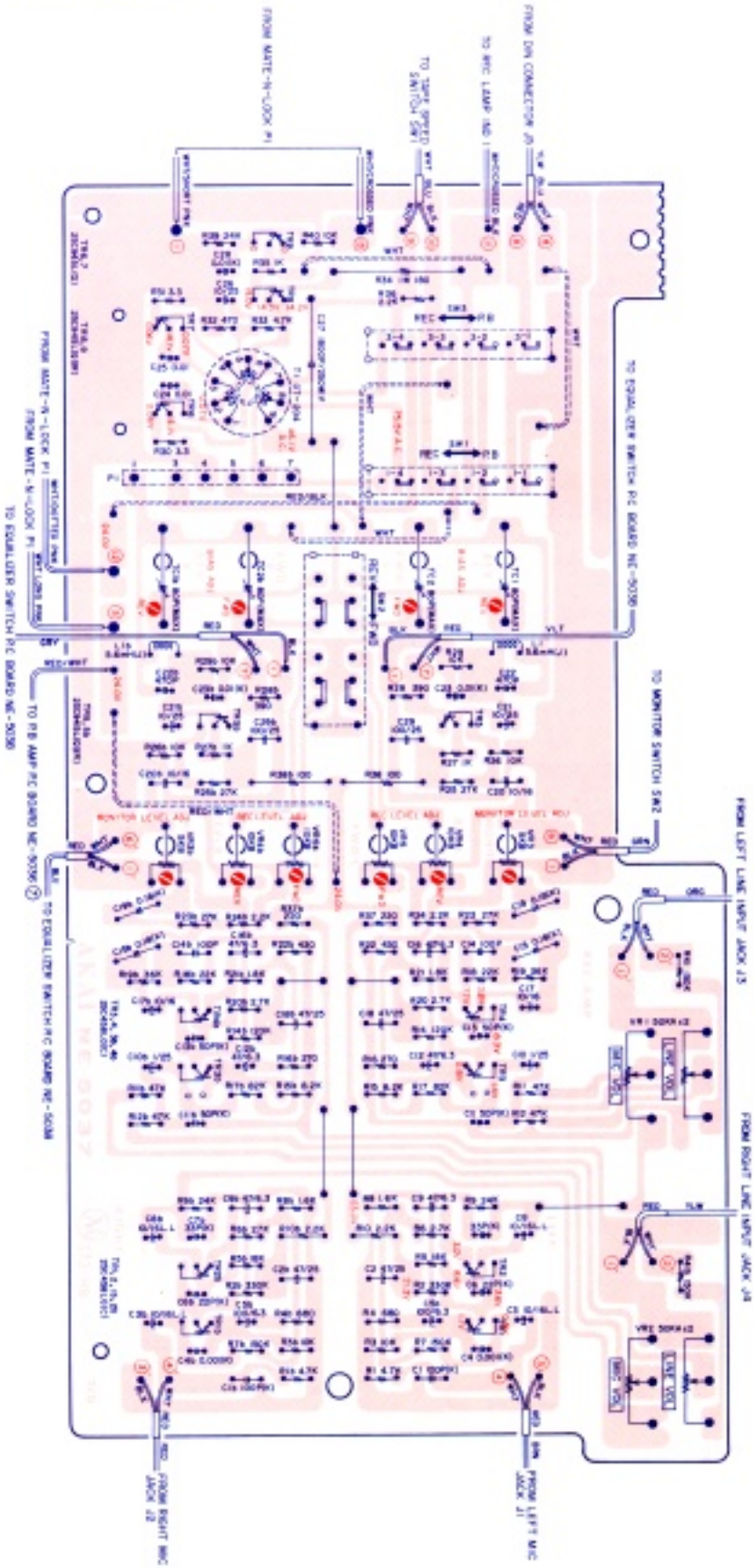

3) SERVO CONTROL P.C BOARD (MY-2036)

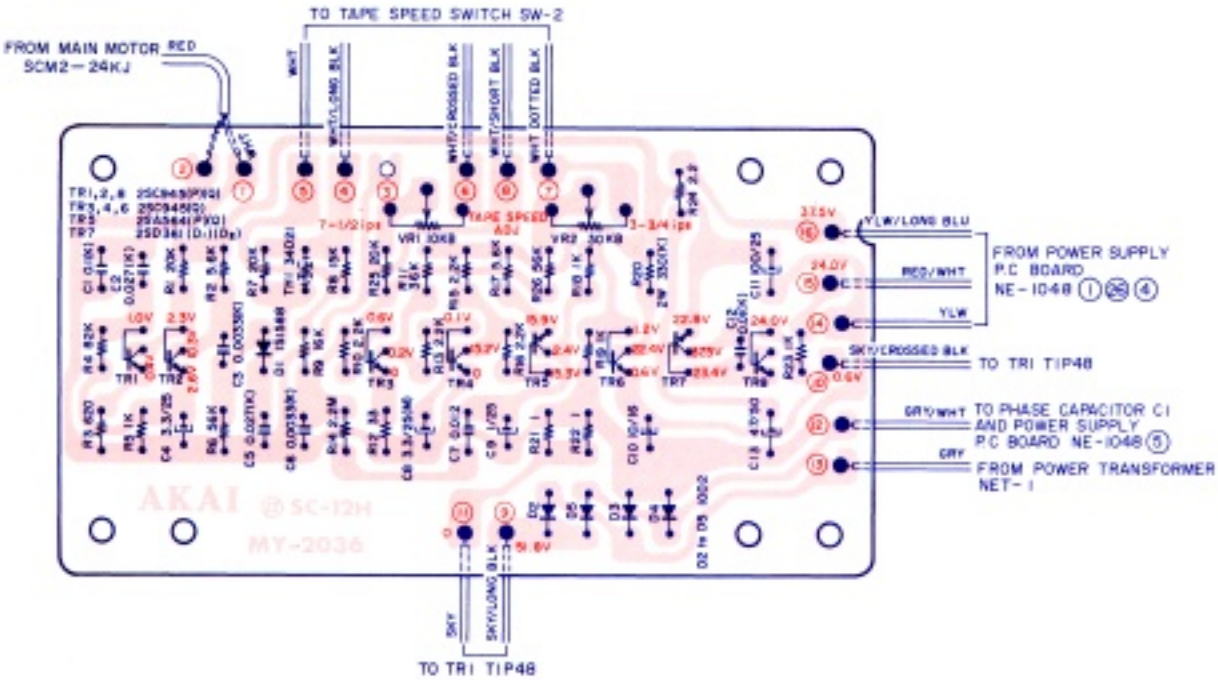

4) POWER SUPPLY P.C BOARD (NE-1048)

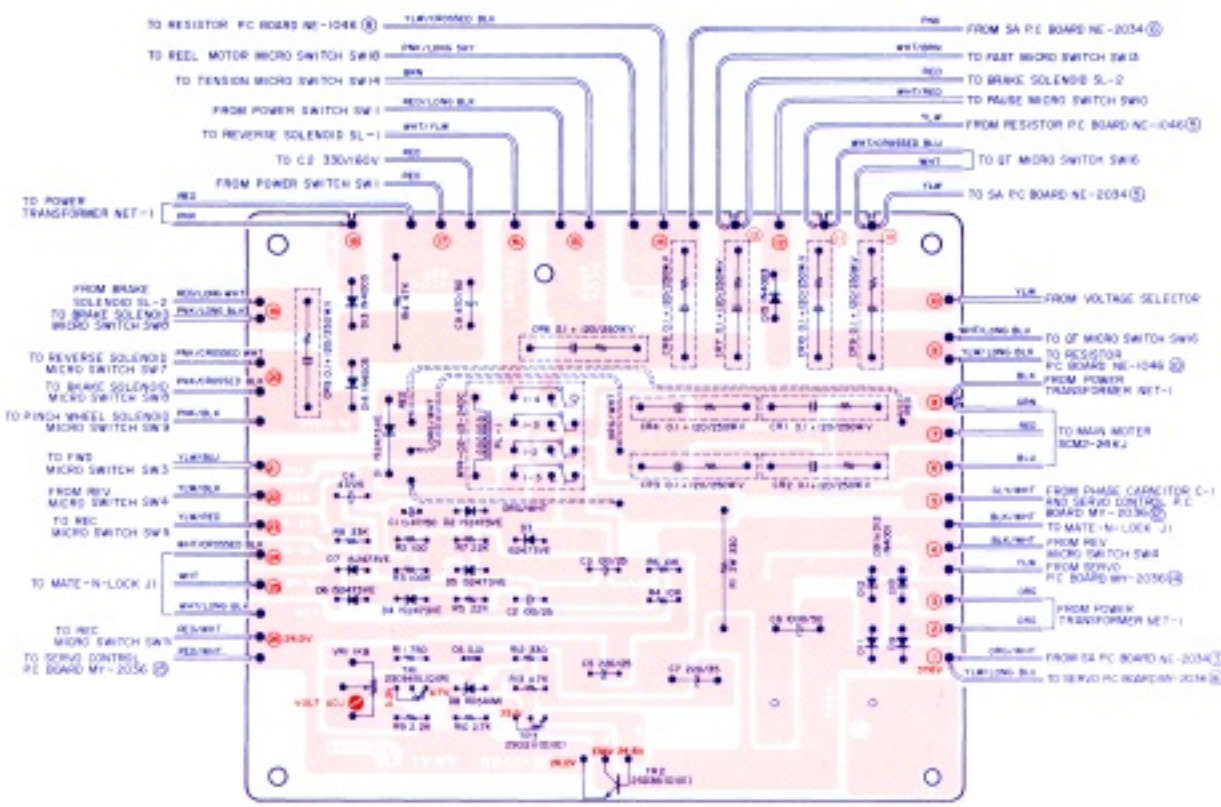

5) EQUALIZER SWITCH P.C BOARD (NE-5038)

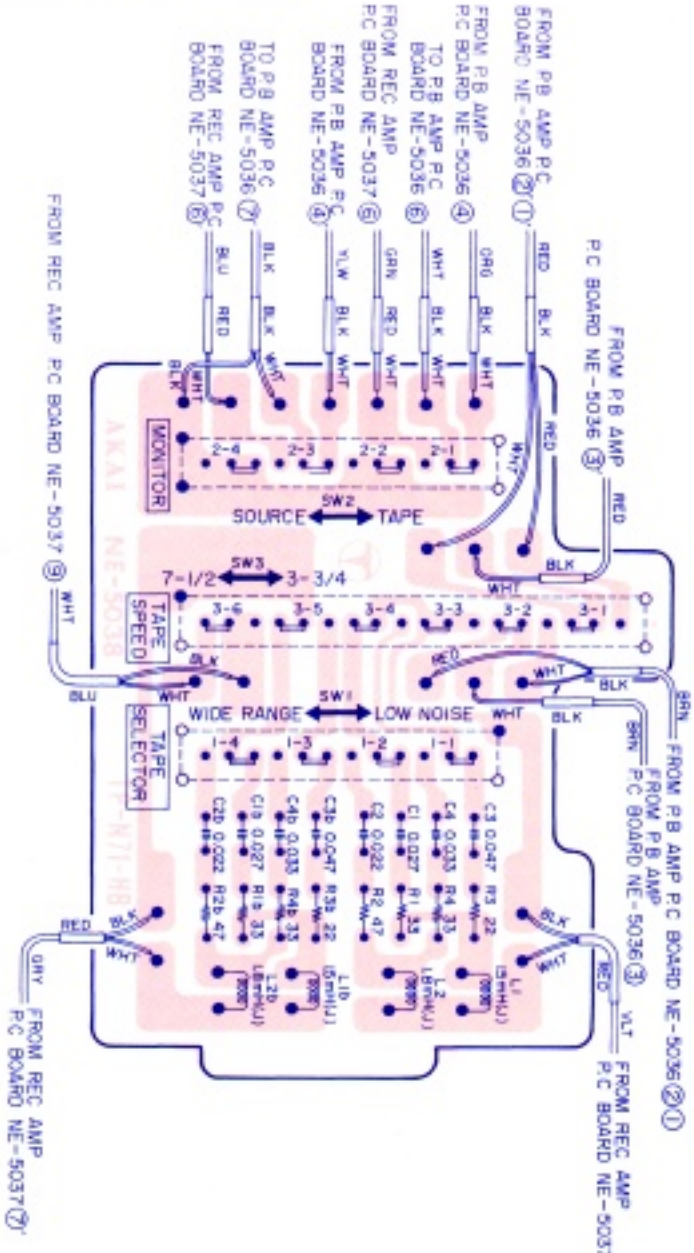

6) RESISTOR P.C BOARD (NE-1046)

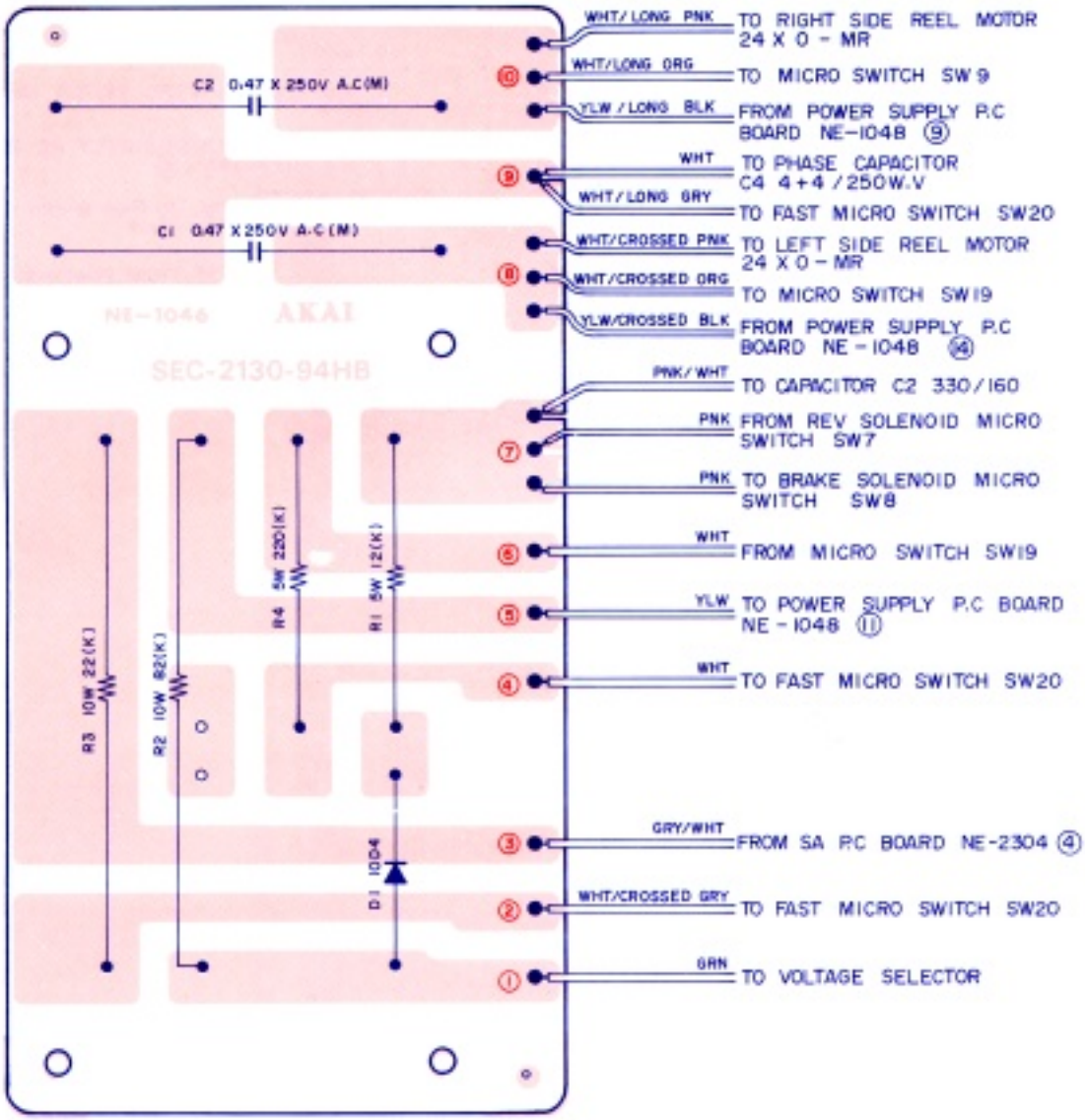

7) TRANSISTOR P.C BOARD (MY-2054)

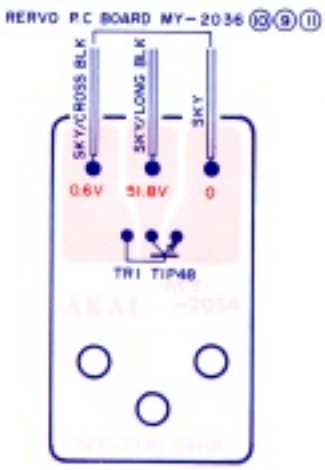

8) SA P.C BOARD (NE-2034)

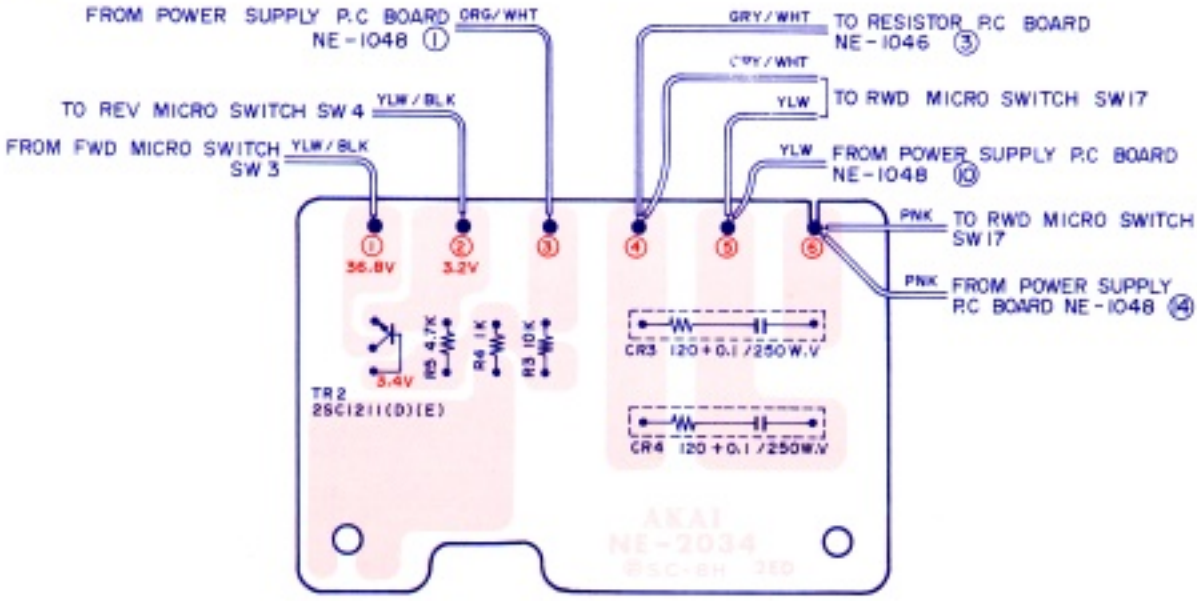

9) DIRECTION INDICATOR LAMP P.C BOARD (NE-1047)

SECTION 2

PARTS LIST

TABLE OF CONTENTS

1. HEAD BLOCK 28
2. MAIN MOTOR BLOCK 30
3. REEL MOTOR/REEL TABLE BLOCK 31
4. OPERATION BLOCK 32
5. TENSION ARM BLOCK 33
6. LEVER SWITCH/PAUSE SWITCH BLOCK 34
7. POWER SUPPLY BLOCK 36
8. MECH. ASSEMBLY BLOCK 37
9. P.C BOARDS 39
   (1) P.B AMP P.C BOARD (NE-5036) BLOCK 39
   (2) REC AMP P.C BOARD (NE-5037) BLOCK 39
   (3) SERVO CONTROL P.C BOARD (MY-2036) BLOCK 40
   (4) POWER SUPPLY P.C BOARD (NE-1048) BLOCK 40
   (5) EQUALIZER SWITCH P.C BOARD (NE-5038) BLOCK 41
   (6) RESISTOR P.C BOARD (NE-1046) BLOCK 41
10. AMP ASSEMBLY BLOCK 42
11. FINAL ASSEMBLY BLOCK 44
12. LIST OF INTERCHANGEABLE SEMICONDUCTORS 45

INDEX 46

Some of the parts in this parts list are only available as a complete assembly, and can not be supplied as individual parts.

HOW TO USE THIS PARTS LIST

1. This parts list is compiled by various individual blocks based on assembly process.
2. When ordering parts, please describe parts number, serial number, and model number in detail.
3. How to read list.

The reference number corresponds with illustration or photo number of that particular parts list.

This number corresponds with the Figure Number.

This number corresponds with the individual parts index number in that figure.

A small "x" indicates the inability to show that particular part in the Photo or Illustration.

12-115x

Schematic Diagram Number of individual manufactured part.
(not required for parts order)

Quantity of particular part required.

Ref. No.	Parts No.	Description	Schmatic No.	Q'ty
		FLYWHEEL BLOCK #13		
12-115x	800425	Flywheel Block Assy. Comp.	RDG-013	1
12-116	244506	Flywheel Only	RD-233	1
12-117x	244754	Felt, Flywheel	RD-275	1
12-118	251324	Main Metal Case	RD-236	1
12-119	253080	Main Metal	RD-237	1

4. The symbol numbers shown on the P.C. Board list can be matched with the Composite Views of components of the Schematic Diagram or Service Manual.
5. Please utilize separate "Common List for Service Parts" for Resistor parts orders.
6. The shape of the parts and parts name, etc. can be confirmed by comparing them with the parts shown on the Electrical Parts Table of P.C. Board.
7. Both the kind of part and installation position can be determined by the Parts Number. To determine where a parts number is listed, utilize Parts Index at end of Parts List.
   It is necessary first of all to find the Parts Number. This can be accomplished by using the Reference Number listed at right of parts number in the Parts Index. (meaning of ref. no. outlined in Item 3 above).
8. Utilize separate "Price List for Parts" to determine unit price. The most simple method of finding parts Price is to utilize the reference number.

ELECTRICAL PARTS LIST TABLE

Because the indication of resistors and capacitors in the P. C. Board photos are being eliminated, please confirm parts name and shape by comparing them with the parts shown in this table.

1

Solid Resistor

2 Stopper Type

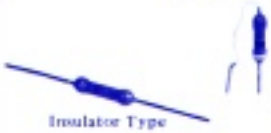

Insulator Type

Carbon Resistor

3

Metal Oxide Film Resistor

4

Cement Resistor

5

Wire-Wound Resistor

6

Thermister

7

Enamel Resistor

1

MP Capacitor (Tubular Type)

2

Plastic Capacitor

3

Mylar Capacitor

4

VFM (Hi-Q) Capacitor

5

Mylar Capacitor

6

Tantalum Capacitor

7

Oil Capacitor (Tubular Type)

8 Vertical Type

(Tubular Type)

Styrol Capacitor

9

Electrolytic Capacitor (Tubular Type)

10 Vertical Type

(Tubular Type)

Electrolytic Capacitor

11

Ceramic Capacitor

12

Metalized Mylar (Paper) Capacitor

13

Trimmer Condenser

VR

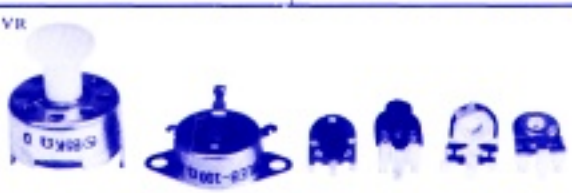

Semi-Fixed Volume

L

Ferri Inductor

TR

Transistor

CR

Spark Quencher

D

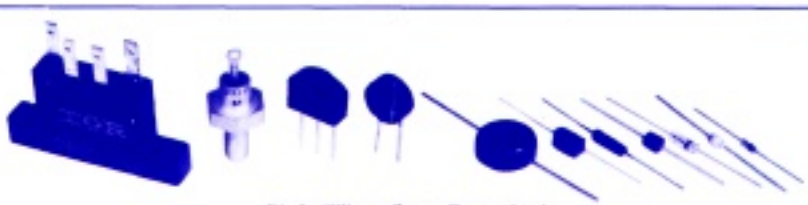

Diode (Silicon, Zener, Germanium)

1 ILLUSTRATION OF HEAD BLOCK

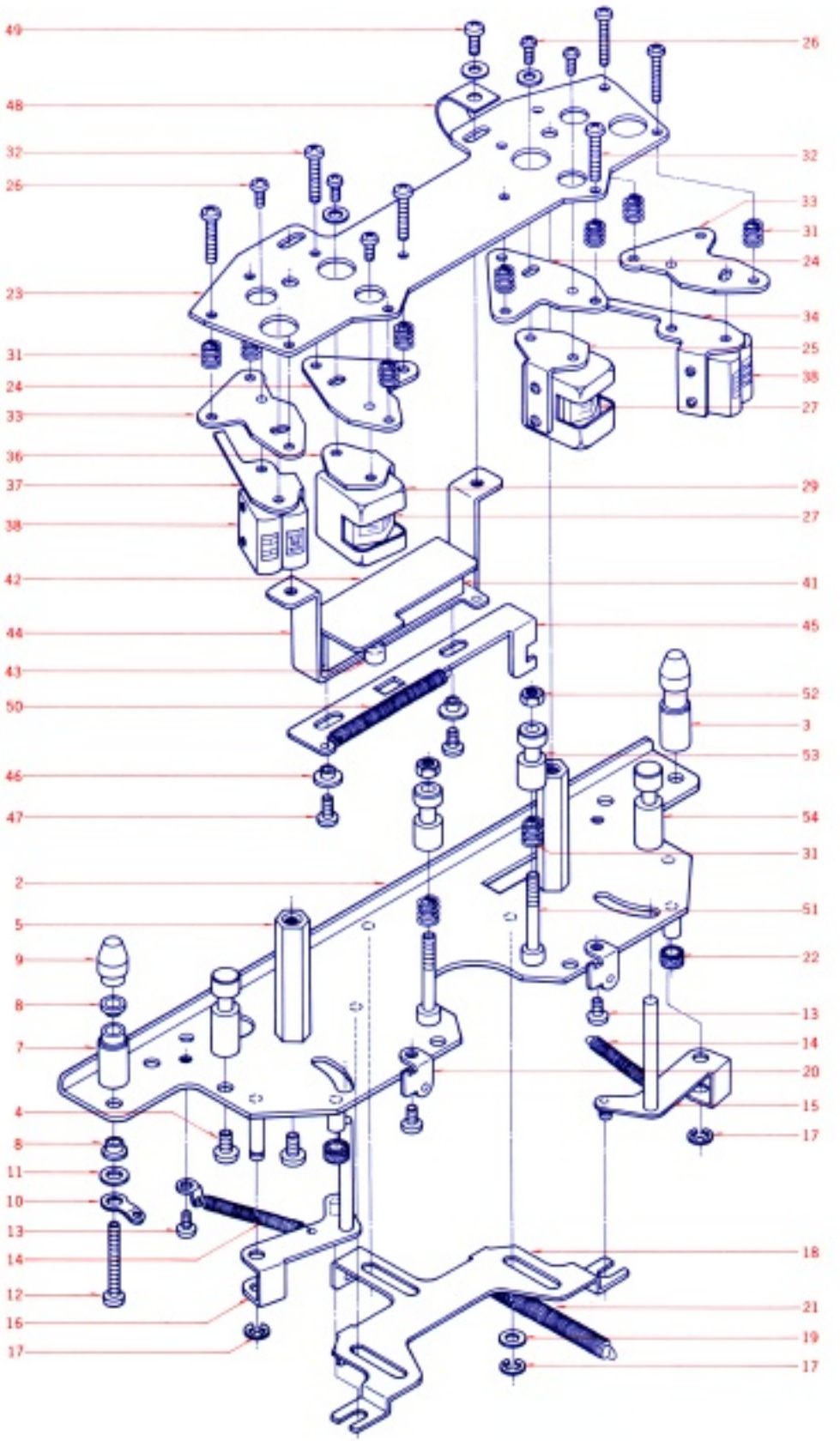

1) HEAD BLOCK

Ref. No.	Parts No.	Description	Schematic No.	Q'ty
1-1x	BH636726	Head Block Comp.	NE	1
1-2	HZ643342	Head Sub Chassis, w/prop	NE-0001	1
1-3	MS643048	Tape Guide	NE-0002	1
1-4	ZS413201	Screw, Pan Head 4x8		1
1-5	MH529233	Head Base Prop B	ND-0017	2
1-6	ZS416687	Screw, Binding Head 4x8		2
1-7	MS643050	Sensing Guide A	NE-0002	1
1-8	HZ527455	Sensing Spacer	ND-0011	2
1-9	MS643061	Sensing Guide B	NE-0004	1
1-10	ZW562476	Earth Lug M3		2
1-11	ZW425002	Washer (SPC) D3.1x8x0.5t		1
1-12	ZS413785	Screw, Binding Head 3x12		1
1-13	ZS323728	Screw, Binding Head 3x5		4
1-14	ZG232121	Tension Lever Spring	MH-143	2
1-15	ML665460	Shifter Lever A, w/pin	NE-0008	1
1-16	ML665471	Shifter Lever B, w/pin	NE-0009	1
1-17	ZW270101	'E' Ring 3mm	6-1-9	3
1-18	HL527444	Shifter Lever C	ND-0002	1
1-19	ZW396437	Washer (Polyslider) D5.1x10.3x0.25t		3
1-20	HL528074	Shifter Spring Hook	ND-0018	2
1-21	ZG527477	Shifter Spring	ND-0024	2
1-22	MZ810191	Cushion Rubber, RD	RD-278	2
1-23	HZ527466	Head Chassis	ND-0002	1
1-24	HZ527501	PB Head Base	ND-0005	2
1-25	HA529470	PB Head Angle A	ND-0004	1
1-26	ZS396000	Screw, Binding Head 3x4		3
1-27	HP536501	PB Head P4-202		2
1-28x	EA463206	Terminal P.C. Board A	RD-A26	2
1-29	HZ527512	Head Shield	ND-0026	2
1-30x	ZS460440	Screw, Pan Head 2x4		4
1-31	ZG466312	Angle Adjust Spring E	BS-0018	14
1-32	ZS562432	Screw, Binding Head 3x13		12
1-33	HZ527490	Erase Head Base	ND-0008	2
1-34	HA527940	REC/E. Head Angle A	ND-0005	1
1-35x	ZS461395	Screw, Round Head 2x3		2
1-36	HA529481	PB Head angle B	ND-0004	1
1-37	HA527951	REC/E. Head Angle B	ND-0005	1
1-38	HR556582	REC/ERASE HEAD RE4-6		2
1-39x	ZS461395	Screw, Round Head 2x3		2
1-40x	HZ583176	RE4-6 Terminal Plate	TW-0025	2
1-41	ES520672	Slide Switch SL-282B4	25-3-88	1
1-42	EA527523	Head Change P.C Board	ND-0025	1
1-43	EO346500	Ferri Inductor FL7H 220 μH(J)	23-1-3	1
1-44	HZ529288	Reverse Switch Base	ND-0013	1
1-45	HL527433	Reverse Lever	ND-0014	1
1-46	ZW527422	Graduated Washer	ND-0015	2
1-47	ZS487866	Screw, Round Head 2.6x6		2
1-48	HZ531584	Earth Plate	ND-0043	1
1-49	ZS304806	Screw, Binding Head 3x5		2
1-50	ZG227452	Spring D	900-118	1
1-51	MH578957	Tape Guide Prop	TD-0003	2
1-52	ZW273756	Nut M3		4
1-53	HZ532710	Tape Guide B	TW-0006	2
1-54	HZ528581	Tape Guide A	ND-0006	2
1-55x	ZS413201	Screw, Pan Head 4x8		2
1-56x	EJ623891	Terminal, V Connector SVF-01T-1.5A	31-1-136	10
1-57x	EJ624420	Housing, V Connector 6P-SVF	31-1-130	1
1-58x	EJ623880	Housing, V Connector 4P-SVF	31-1-125	1

When ordering parts, please describe Parts Number, Serial Number, and Model Nuber in detail.

2 ILLUSTRATION OF MAIN MOTOR BLOCK

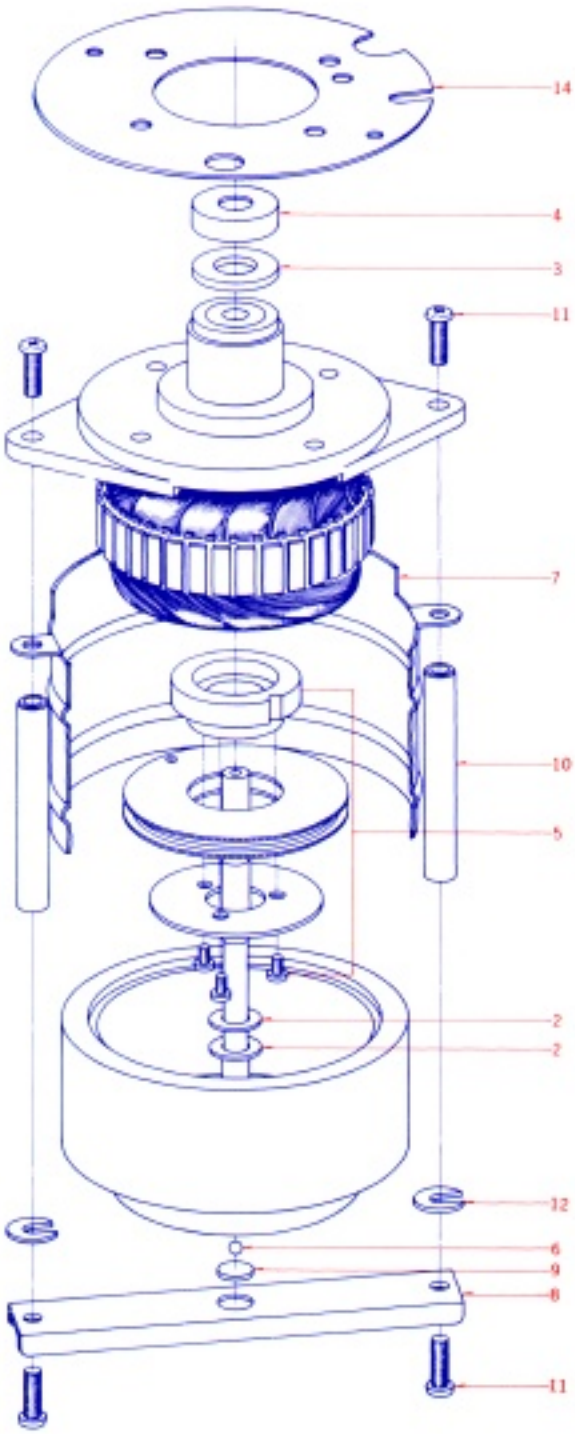

2) MAIN MOTOR BLOCK

Ref. No.	Parts No.	Description	Schematic No.	Q'ty
2-1x	BM636704	Main Motor Block Comp.	KJ, MY, NE	1
2-2	ZW597543	Thrust Washer A	KJ-7009	2
2-3	ZW597622	Felt Washer	KJ-7022	1
2-4	SK597633	Cap	KJ-7033	1
2-5	BZ600300	Detector Gear Block Comp.	KJ, MY, NE	1
2-6	MV368886	Steel Ball D3		1
2-7	MZ597666	Motor Shield Plate	KJ-7026	1
2-8	MZ597644	Thrust Angle	KJ-7024	1
2-9	MZ597690	Ball Holder (Nylon)	KJ-7029	1
2-10	MS597655	Thrust Holding Prop	KJ-7025	2
2-11	ZS413234	Screw, Pan Head 4x12		4
2-12	ZW603786	Adjust. Washer (U) D4x13x0.2t		2
2-13x	ZW603775	Adjust. Washer (U) D4x13x1.6t		2
2-14	MZ625577	motor Shield Plate	MY-1047	1

3) REEL MOTOR/REEL TABLE BLOCK

Ref. No.	Parts No.	Description	Schematic No.	Q'ty
3-1	BM314741	Torque Motor (24XO-2) Block Comp.	MR, MS, KD	1
3-2x	BR482400	Supply Reel Table Block Comp.	KH, ND, NE	1
3-3x	BR482411	Take-Up Reel Table Block Comp.	KH, ND, NE	1
3-4	MT488147	Reel Table Disk B, RD	RD-272	1
3-5	MT255420	Reel Retainer	3R-102	1
3-6	MS342000	Reel Shaft	3R-106	1
3-7	ZG255633	Reel Spring	3R-109	1
3-8	MT297663	'O' Ring (3R) 2.9x1.65mm	3R-139	1
3-9	ZW270088	'E' Ring 1.9mm	6-1-9	1
3-10	MT473422	Reel Table Rubber, KH	KH-2042	1
3-11x	MT473444	Brake Drum (Left) (Supply)	KH-2031	1
3-12	MT473433	Brake Drum (Right) (Take-Up)	KH-2031	1
3-13x	ZW273778	Earth Lug M3		1
3-14	MT436860	Brake Cloth Comp.	MR-288	1
3-15	ZG317496	Felt Tension Spring	MR-298	1
3-16x	ZS425981	Screw, Binding Head 3x3		1
3-17	MR317507	Counter Pulley (Take-Up)	MR-217	1
3-18	ZS365973	Screw, Countersunk Head 2.3x12		2
3-19	ZS424056	Screw, Pan Head 4x10		2
3-20	ZS403222	Screw, Countersunk Head 3x10		3
3-21	MB527556	Counter Belt D=93x1.5	ND-1022	1

When ordering parts, please describe Parts Number, Serial Number, and Model Nuber in detail.

3 ILLUSTRATION OF REEL MOTOR/REEL TABLE BLOCK

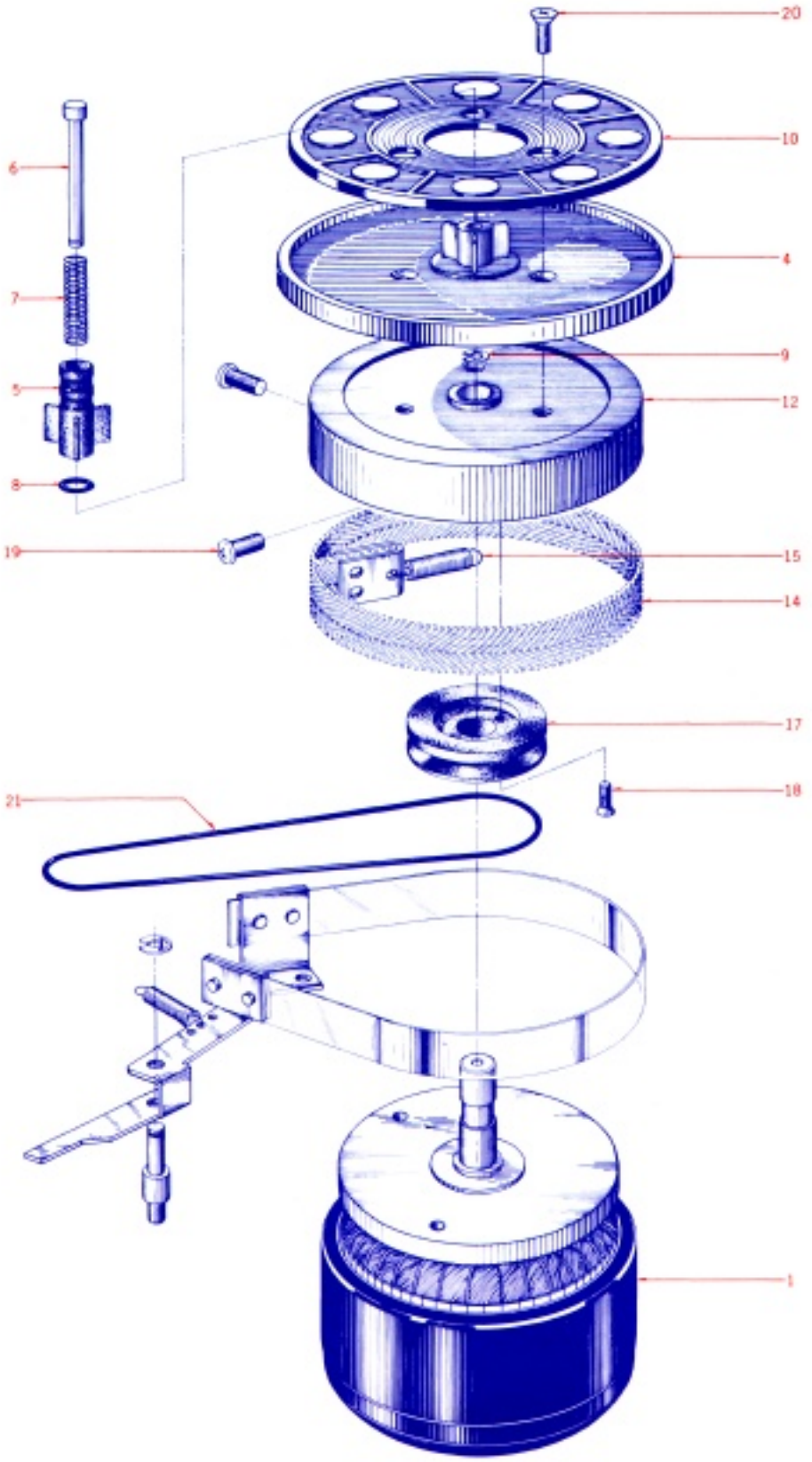

4 ILLUSTRATION OF OPERATION BLOCK

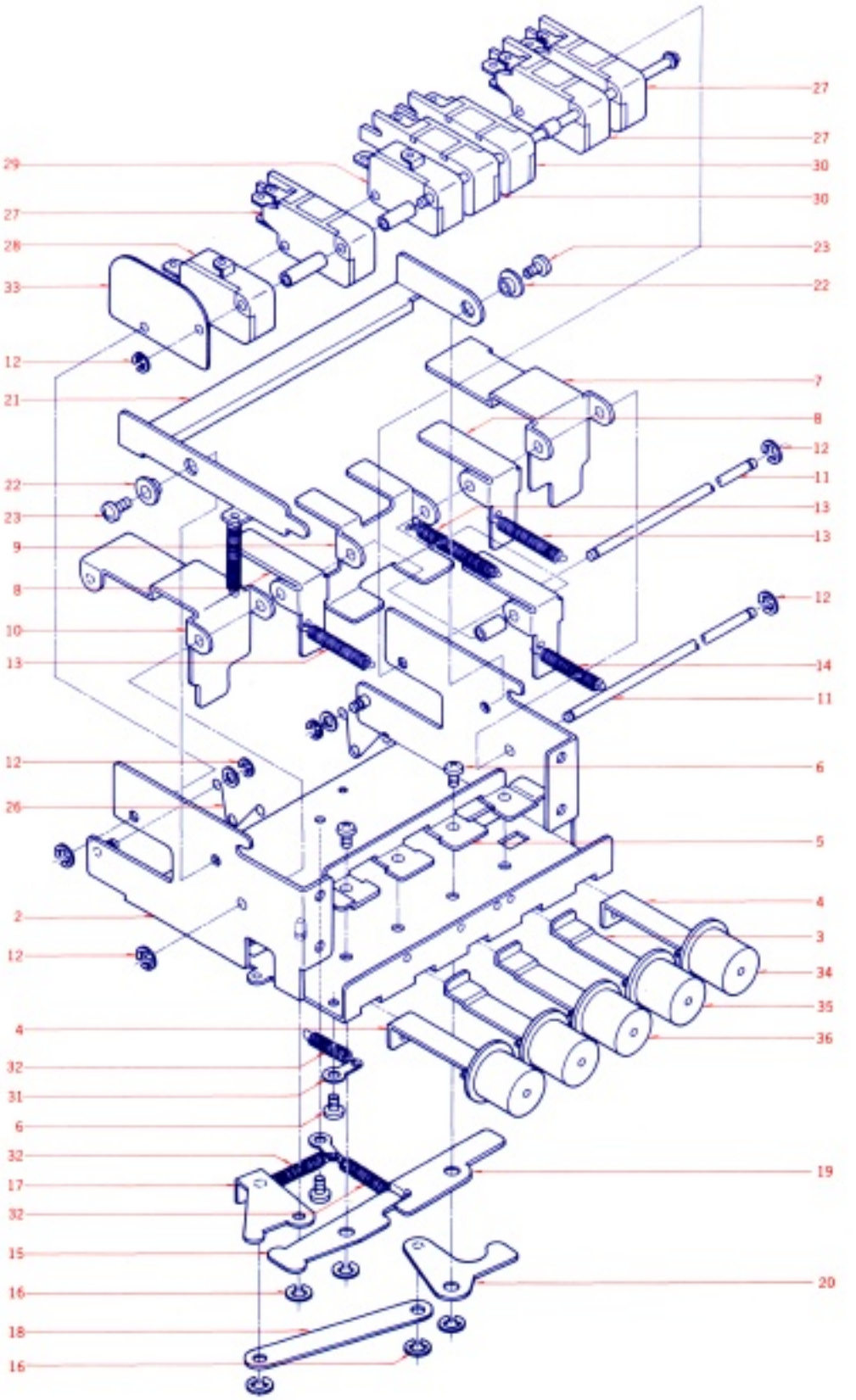

5 ILLUSTRATION OF TENSION ARM BLOCK

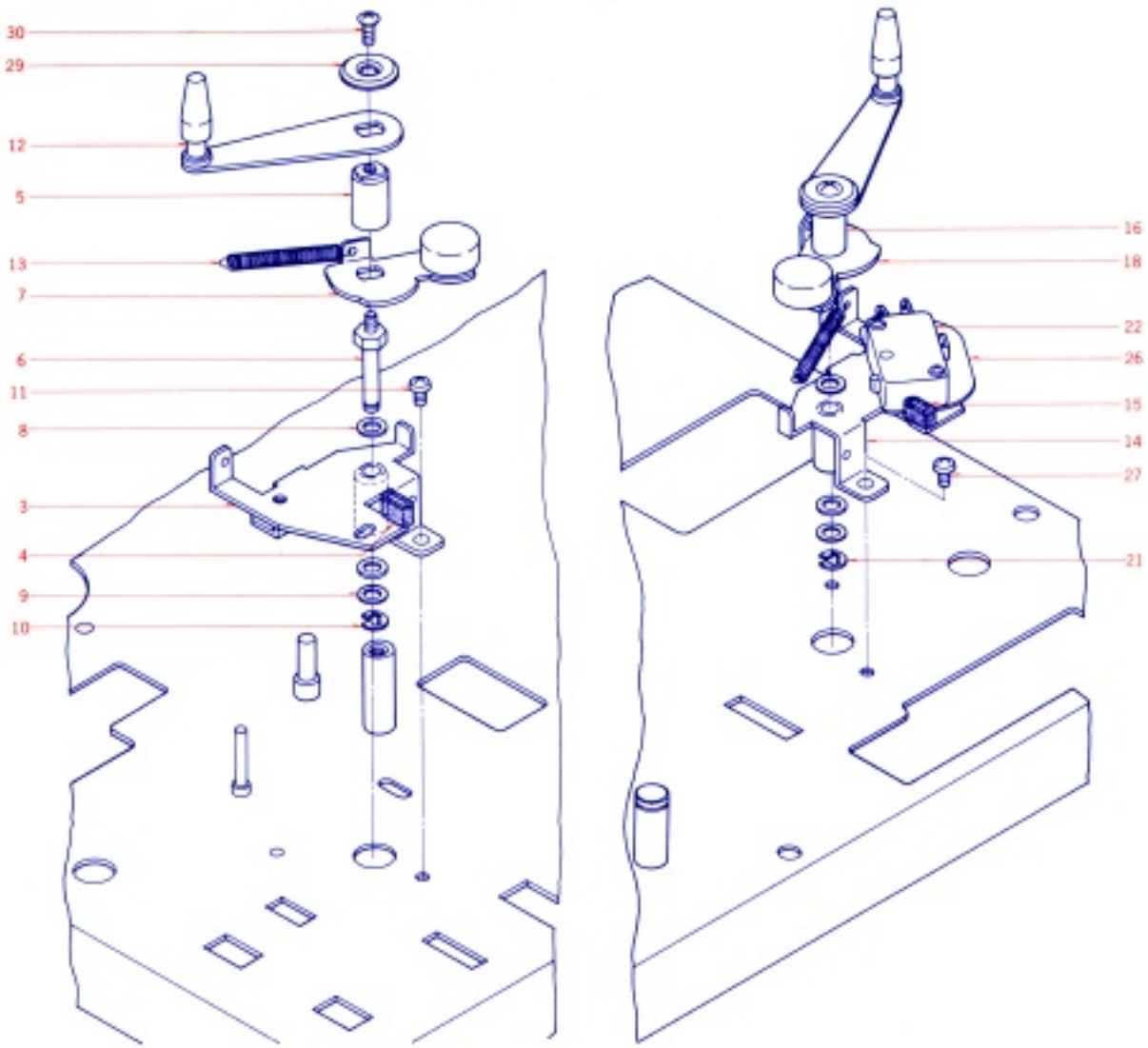

6 ILLUSTRATION OF LEVER SWITCH/PAUSE SWITCH BLOCK

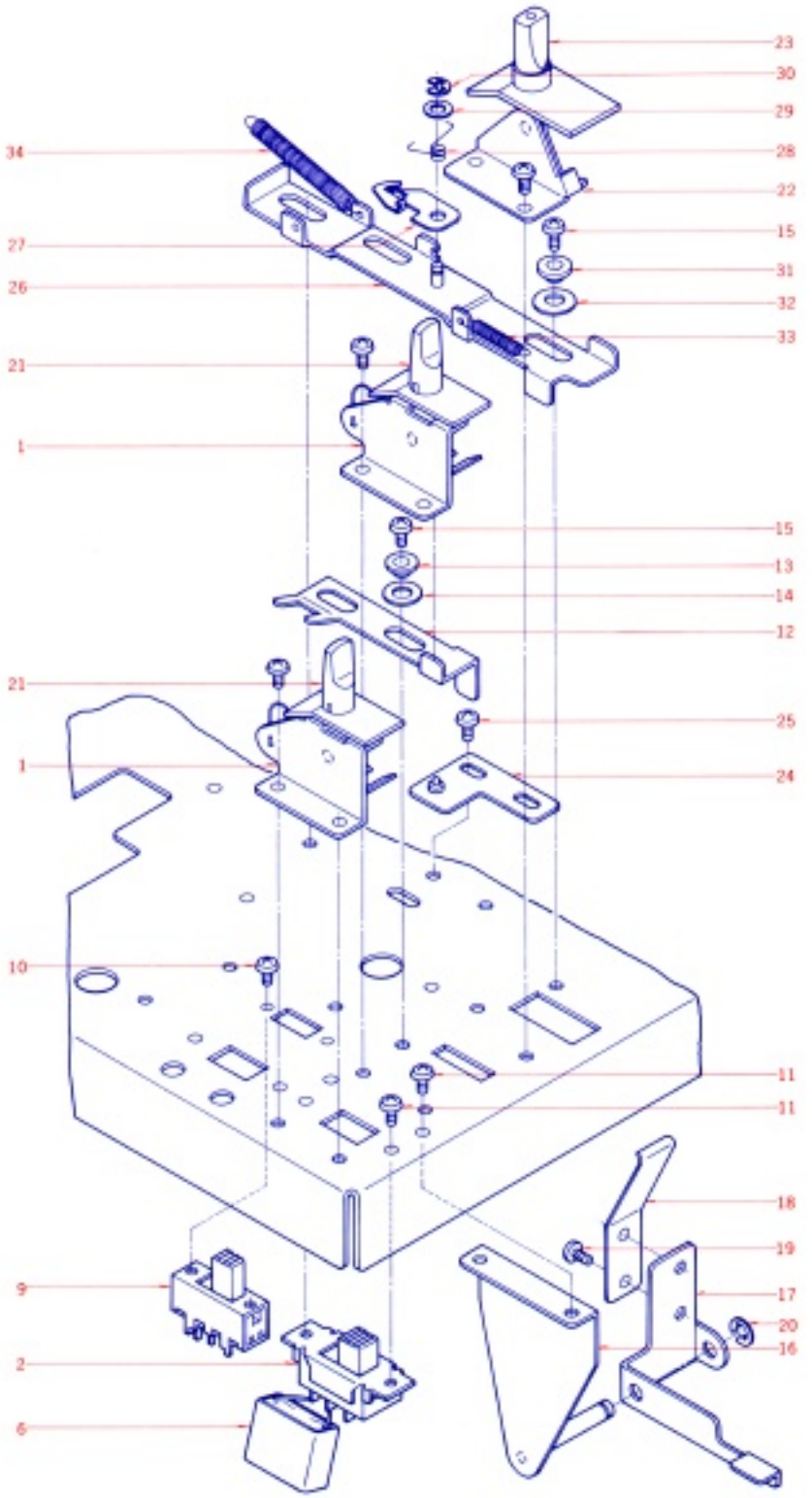

4) OPERATION BLOCK

Ref. No.	Parts No.	Description	Schematic No.	Q'ty
4-1x	BZ636715	Operation Block Comp.	NE	1
4-2	MZ643972	Operation Box	NE-2001	1
4-3	MZ640135	Slide Plate A	NE-2002	3
4-4	MZ640146	Slide Plate B	NE-2003	2
4-5	MZ640247	Slide Limitter	NE-2012	1
4-6	ZS417216	Screw, Pan Head 3x4		8
4-7	MZ640168	Switch Plate B	NE-2005	1
4-8	MZ640157	Switch Plate A	NE-2004	1
4-9	MZ640181	Switch Plate D	NE-2006	1
4-10	MZ640170	Switch Plate C	NE-2005	1
4-11	MS640192	Operation Shaft	NE-2007	3
4-12	ZW270088	'E' Ring 1.9mm		6
4-13	ZG644152	Return Spring A	NE-2020	3
4-14	ZG644185	Return Spring B	NE-2022	1
4-15	MZ640203	Operation Cam B	NE-2008	1
4-16	ZW280283	'U' Ring 2.85mm	6-1-1	6
4-17	MZ640236	Operation Cam E, w/pin	NE-2011	1
4-18	MZ640258	Cam Joint	NE-2013	1
4-19	MZ640214	Operation Cam C	NE-2009	1
4-20	MZ640225	Operation Cam D	NE-2010	1
4-21	MZ640260	Reset Arm	NE-2004	1
4-22	ZW625241	Graduated Washr	MY-1013	2
4-23	ZS379350	Iso Screw, Pan Head 3x6		2
4-24x	ZS422076	Screw, Pan Head 3x5		1
4-25x	ZS608275	Screw, Pan Head 3x5, w/washer		1
4-26	ZG640304	Reset Spring	NE-2018	2
4-27	ES562465	Micro Switch K-1	25-1-26	3
4-28	ES250064	Micro Swtich V-1A44 U/L	25-1-7	1
4-29	ES403727	Micro Switch V-1A106 U/L	25-1-30	1
4-30	ES573456	Micro Switch K-2	25-1-30	2
4-31	ZW562476	Earth Lug M3		3
4-32	ZG644163	OP Spring	NE-2021	5
4-33	MZ402377	Micro Insulator D	KD-2050	1
4-34	SB631146	Push Button D (Yellow)	CW-2014	2
4-35	SB631157	Push Button E (Green)	CW-2014	2
4-36	SB631168	Push Button F (White)	CW-2014	1

5) TENSION ARM BLOCK

Ref. No.	Parts No.	Description	Schematic No.	Q'ty
5-1x	BZ636761	Tension Arm (Left) Block Comp.	NE	1
5-2x	BZ636750	Tension Arm (Righ) Block Comp.	NE	1
5-3	MZ638943	Tension Arm Base (Left), w/metal	NE-2025	1
5-4	MB428343	Stopper Rubber, KD	KD-1008	1
5-5	MS625825	Tension Shaft A	MY-2024	1
5-6	MS615014	Tension Shaft B	MY-2032	1
5-7	MZ627265	Tension Switch Cam, w/weight	MY-2025	1
5-8	ZW419646	Washer (SPC) D4.5x9.8x0.5t		1
5-9	ZW601075	Washer D4.1x7x0.1t		1
5-10	ZW270101	'E' Ring 3mm	6-1-9	1
5-11	ZS422076	Screw, Pan Head 3x5		2
5-12	MZ644196	Tension Arm, w/post	NE-2023	1
5-13	ZG580746	Tension Spring	TD-2074	1
5-14	MZ644062	Tension Arm Base (Right), w/metal	NE-2025	1
5-15	MZ810191	Cushion Rubber, RD	RD-278	1
5-16	MS625825	Tension Shaft A	MY-2024	1
5-17x	MS615014	Tension Shaft B	MY-2032	1
5-18	MZ627265	Tension Switch Cam, w/weight	MY-2025	1
5-19x	ZW419646	Washer (SPC) D4.5x9.8x0.5t		1
5-20x	ZW601075	Washer D4.1x7x0.1t		1
5-21	ZW270101	'E' Ring 3mm		1
5-22	ES250064	Micro Switch V-1A44 U/L	25-1-7	1
5-23x	ZW397146	Micro Switch Nut	KD-1057	1
5-24x	ZS608253	Screw, Pan Head 3x20		1
5-25x	ZS422965	Screw, Pan Head 3x15		1
5-26	MZ402377	Micro Insulator D	KD-2050	1
5-27	ZS422076	Screw, Pan Head 3x5		2
5-28x	ZG580746	Tension Spring	TD-2074	1
5-29	ZW535094	Decorative Washer	TE-2077	2
5-30	ZS200395	Screw, Countersunk Head 3x6		2

6) LEVER SWITCH/PAUSE SWITCH BLOCK

Ref. No.	Parts No.	Description	Schematic No.	Q'ty
		LEVER SWITCH BLOCK		
6-1	BS636794	Lever Switch Block Comp.	NE	2
6-2	ES479485	Slide Switch S-1	25-3-96	1
6-3x	ES641068	Slide Switch JE06 (JPN)	25-3-134	1
6-4x	ES642677	Slide Switch JE08 (CEE)	25-3-118	1
6-5x	ES641092	Slide Switch JE07 (CSA)	25-3-115	1
6-6	EC551160	Ceramic/C. NB821 YZ 0.01μF 1.4kWV	26-5-58	1
6-7x	EC565896	Ceramic/C. DP6600 YM 0.01μF 1.4kWV(CSA)	26-5-58	1
6-8x	MZ643072	Switch Joint (CEE)	NE-1002	1
6-9	ES481656	Slide Switch SSD02239	25-3-78	1
6-10	ZS479474	Screw, Pan Head 2.6x5		2
6-11	ZS422076	Screw, Pan Head 3x5		4
6-12	MZ643083	Speed Switch Slide	NE-1003	1
6-13	ZW625241	Graduated Washer	MY-1013	1
6-14	ZW374545	Washer, (PBP) D5.1x10.3x0.4t		2
6-15	ZS379350	Iso Screw, Pan Head 3x5		4
6-16	MZ643094	Speed Switch Stand, w/prop	NE-1006	1
6-17	ML643105	Speed Switch Lever A	NE-1005	1
6-18	ML643116	Speed Switch Lever B	NE-1006	1
6-19	ZS417216	Screw, Pan Head 3x4		2
6-20	ZW290283	'U' Ring 2.85mm	6-1-1	1
6-21	SK638976	Knob 1-C	CP-5018	2
		PAUSE SWITCH BLOCK		
6-22	BS636805	Pause Switch Block Comp.	NE	1
6-23	SK644117	Pause Knob	NE-2030	1
6-24	MZ643151	Pause Lock Table, w/pin	NE-1010	1
6-25	ZS323728	Screw, Binding Head 3x5		2
6-26	MZ643138	Pause Slide, w/shaft	NE-1008	1
6-27	TC515575	Switch Lock Cam B	CG-2501	1
6-28	ZG514440	Button Lock Spring B	CG-2502	1
6-29	ZW424495	Washer, (SPC) D3.1x8x1t		1
6-30	ZW270088	'E' Ring 1.9mm	6-1-9	1
6-31	ZW625241	Graduated Washer	MY-1013	2
6-32	ZW374545	Washer, (PBP) D5.1x10.3x0.4t		2
6-33	ZG567696	Azimuth Spring 2	CP-1040	1
6-34	ZG232121	Tension Lever Spring	MH-140	1

When ordering parts, please describe Parts Number, Serial Number, and Model Nuber in detail.

7 PHOTO OF POWER SUPPLY BLOCK

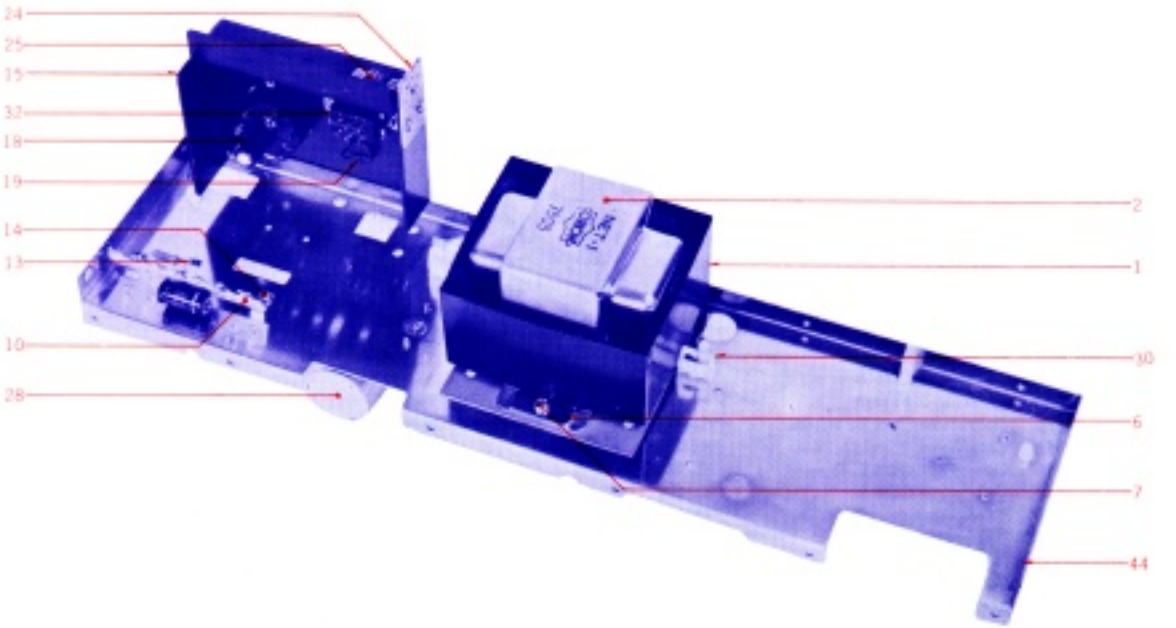

7) POWER SUPPLY BLOCK

Ref. No.	Parts No.	Description	Schematic No.	Q'ty
7-1	MZ627636	Trans. Shield Plate	MY-2053	1
7-2	BT638864	Power Trans. NET-1	38-4-345	1
7-3x	BT642666	Power Trans. NET-4 (CEE)	38-4-348	1
7-4x	BT642655	Power Trans. NET-3 (CSA)	38-4-347	1
7-5x	BT642644	Power Trans. NET-2 (JPN)	38-4-346	1
7-6	EZ486617	Trans. Reinforcement Plate B	LF-5222	2
7-7	ZS424056	Screw, Pan Head 4x10		1
7-8x	ZW416698	Nut M4		2
7-9x	ZS413201	Screw, Pan Head 4x8 (CEE) (CSA)		4
7-10	EJ343934	Lug Plate KPL5L	33-3-12	1
7-11x	EC646031	Elect./C. (Tub. Type) 4.7μF 160WV	24-13-17	1
7-12x	ER411873	Metal Oxide Film/R. 1W 100Ω(K)	35-15-10	1
7-13	ED570295	Silicon Diode 1N4003	45-2-61	1
7-14	ZS325495	Tapping Screw #2 3x6 BR		2
7-15	MZ626861	VS Table A	MY-2030	1
7-16x	MZ625858	VS Table B (CEE)(CSA)	MY-2030	1
7-17x	MZ647133	VS Base C (JPN)	MY-2030	1
7-18	EJ233370	Socket (Volt. Selector) S-18010	49-2-3	1
7-19	EJ631945	Strain Relief SR-4N-4	2-7-49	1
7-20x	EJ246936	Strain Relief SR-6W-1 (WG,3 Core)(CEE)	2-7-8	1
7-21x	EW540123	AC Cord (CUL) 2.5M	26-3-29	1
7-22x	EW516600	AC Cord VM-0065 (CEE)	26-3-28	1
7-23x	EW524845	AC Cord 2.5M (JPN)	26-3-31	1
7-24	EA628075	Transistor P.C. Board	MY-2054	1
7-25	ET621786	Transistor TIP-48	45-1-197	1
7-26x	ZS422076	Screw, Pan Head 3x5		2
7-27x	ZS379350	Iso Screw, Pan Head 3x6		1
7-28	EC647381	MP/C. (Lug Type Uni/D.) 3.5+1.5μF 150WV	24-9-106	1
7-29x	ZS325495	Tapping Screw, #2 3x6 BR		2
7-30	EJ496686	Wire Clip 220-JD486010-119	2-7-16	6
7-31x	EJ639134	9P Soket Housing 103-3-9R	31-1-148	1
7-32	ES479485	Slide Switch S-1	35-3-66	1
7-33x	ZS383951	Screw, Truss Head 3x5		2
7-34x	SM647245	Cycle Name Plate	MY-2058	1
7-35x	EZ461125	Trans. Shield Plate C	MC-5017	1
7-36x	EZ549314	Trans. Shield Cushion	MU-5031	4
7-37x	EZ655198	Fuse Holder 5P Base (CSA)	40-1-71	1
7-38x	EZ658721	Fuse Holder 5P (JPN)	40-1-78	1
7-39x	EJ642712	Fuse Holder NE (CEE)	40-1-65	1
7-40x	EF593706	Fuse 500mAT (CEE)	39-1-53	4
7-41x	EF623103	Fuse, (SEMKO Type) 1AT (CEE)	39-1-53	1
7-42x	EF277402	Fuse, ST-2 1A (CSA)	39-1-26	4
7-43x	EF588420	Fuse, 1A 125V (JPN)	39-1-52	5
7-44	MZ640348	Center Frame	NE-1045	1

When ordering parts, please describe Parts Number, Serial Number, and Model Nuber in detail.

8 ILLUSTRATION OF MECH. ASSEMBLY BLOCK

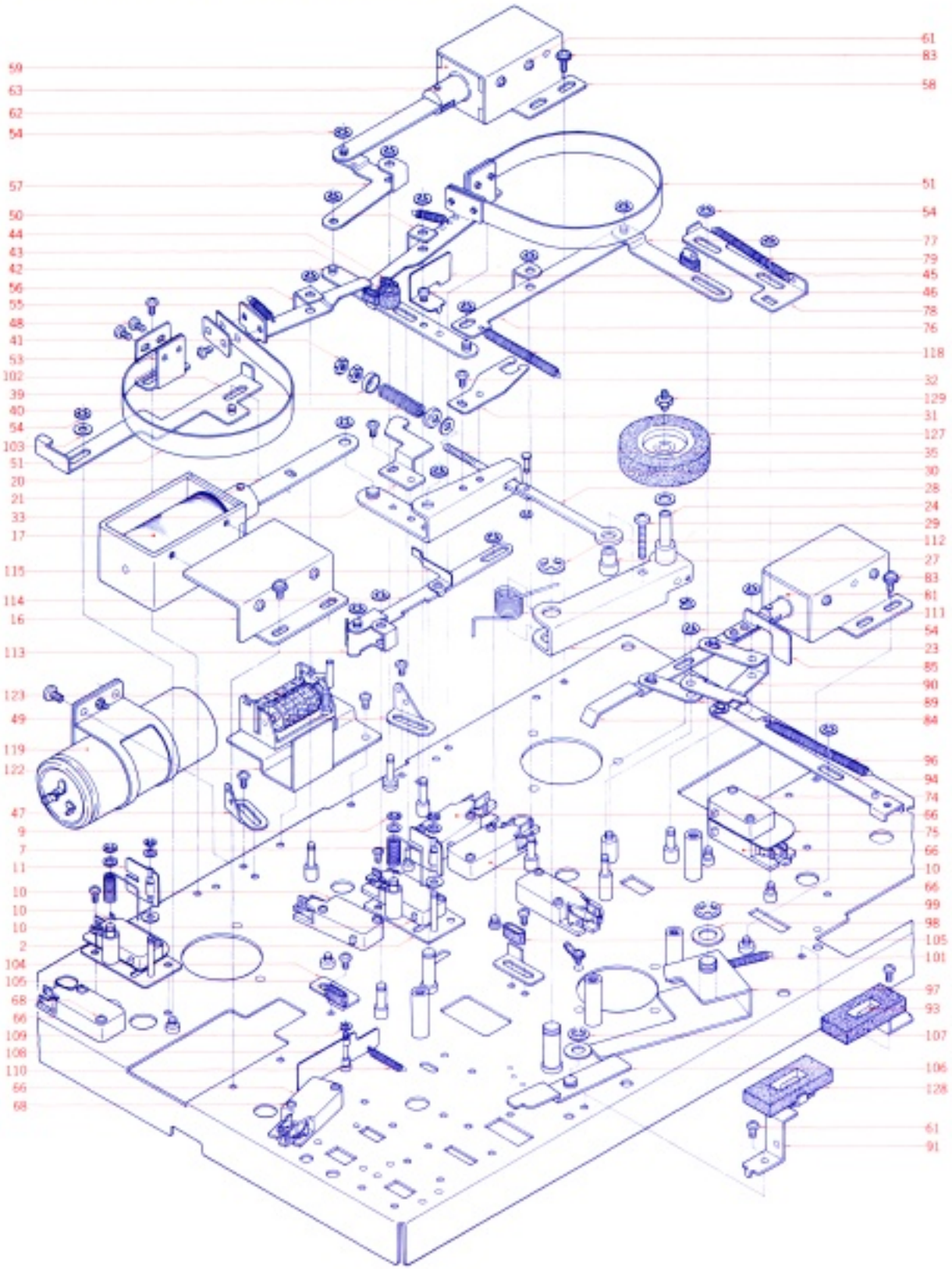

8) MECH. ASSEMBLY BLOCK

Ref. No.	Parts No.	Description	Schematic No.	Q'ty
		QUICK SWITCH BLOCK		
8-1x	BS636917	Quick Switch Block Comp.	NE	2
8-2	EZ625781	Quick Switch Table, w/prop	MY-2009	1
8-3x	ZS483502	Screw, Pan Head 3x13		2
8-4x	MH528513	Switch Pin	ND-1053	1
8-5x	MH527635	Switch Pipe	ND-1054	1
8-6x	ZW273756	Nut M3		1
8-7	ZG529211	Switch Spring	ND-1052	1
8-8x	ZW259738	Washer (Polyslider) D4.1x7x0.25t		1
8-9	ZW270101	'E' Ring 3 mm	6-1-9	1
8-10	ES562465	Micro Switch K-1	25-1-26	2
8-11	MZ529391	Quick Plate	ND-1063	1
8-12x	ZW622001	Washer, D3.1x13x0.5t		1
8-13x	ZW622012	Washer, D3.1x5x0.2t		1
8-14x	ZW270088	'E' Ring 1.9mm	6-1-9	1
		PINCH ROLLER PLUNGER BLOCK		
8-15x	BZ636816	Pinch Roller Plunger Block Comp.	NE	1
8-16	MZ640034	Plunger Bracket	NE-1033	1
8-17	EP638706	Plunger Solenoid 1660PHT	44-1-31	1
8-18x	ER376435	Spark Quencher U/L 0.1μ+120Ω 250WV	43-1-35	1
8-19x	ZS422076	Screw, Pan Head 3x5		2
8-20	MZ643331	P Plunger joint	NE-1029	1
8-21	MH533913	Connecting Pin	TW-2010	1
8-22x	ZW270088	'E' Ring 1.9mm	6-1-9	1
8-23	ML528445	P Lever	ND-1036	1
8-24	MS527591	Pinch Roller Shaft	ND-1030	1
8-25x	ZW274026	Spring Washer, M5		1
8-26x	ZW413278	Nut M5		1
8-27	MH529727	P Joint Pin B	ND-1034	1
8-28	MZ527848	P Joint	ND-1035	1
8-29	ZS444262	Iso Screw, Binding Head 4x18		1
8-30	ML644084	P Plunger Lever, w/pin	NE-2027	1
8-31	MZ529378	Shifter Adjuster	ND-1032	1
8-32	ZS417216	Screw, Pan Head 3x4		2
8-33	MZ644106	Quick Plate	NE-2029	1
8-34x	ZS417216	Screw, Pan Head 3x4		2
8-35	MZ529356	Pinch Roller Joint B	ND-1027	1
8-36x	MZ528557	P Joint Pin A	ND-1028	1
8-37x	ZW270088	'E' Ring 1.9mm	6-1-9	1
8-38x	ZW345442	Washer (Nylon)D4.2x9x1t		1
8-39	MZ802980	Spring Holder	RD-276	2
8-40	ZG644095	Cramp Spring	NE-2028	1
8-41	ZW413188	Nut M4		2
		MECH. ASSEMBLY BLOCK		
8-42	ML643241	Brake Lever	NE-1019	1
8-43	MZ397181	Lever Cushion	KD-1069	1
8-44	MB606712	Stopper Rubber KJ	KJ-2060	2
8-45	MZ529244	Switch Plate	ND-1061	1
8-46	ZS417216	Screw, Pan Head 3x4		1
8-47	MZ314605	Spring Rack, MR	MR-104	1
8-48	ZS323728	Screw, Binding Head 3x5		26
8-49	MZ397080	Spring Rack	KD-1010	1
8-50	ML314976	Brake Lever A	MR-210	1
8-51	MT314987	Brake Band	MR-213	2
8-52x	MZ314998	Brake Band Retaining Plate	MR-212	4
8-53	MZ315000	Brake Band Support	MR-214	2
8-54	ZW290283	'U' Ring 2.85mm	6-1-1	23
8-55	ZG315011	Brake Lever Spring	MR-116	2
8-56	ML396810	Brake Lever B	KD-1038	1
8-57	ML529525	Brake Lever A	ND-1029	1
8-58	MZ640023	Plunger Base	NE-1032	1
8-59	EP638695	Plunger Solenoid 1240PHT	44-1-23	1
8-60x	ED570295	Silicon Diode 1N4003	45-2-61	1
8-61	ZS422076	Screw, Pan Head 3x5		10
8-62	MZ529863	Pinch Roller Joint	ND-1064	1
8-63	MH257477	Connecting Pin	RD-211	1
8-64x	ZW270088	'E' Ring 1.9mm	6-1-9	1
8-65x	MZ250413	Micro Insulator C	RC-127	1
8-66	ES573456	Micro Switch K-2	25-1-30	5
8-67x	ZW397146	Micro Switch Nut	KD-1057	1
8-68	ZS608264	Screw, Pan Head 3x25		2
8-69x	ZS483502	Screw, Pan Head 3x13		4
8-70x,71x	EC551160	Ceramic/C. NB821YZ 0.01μF(Z) 1.4kWV	24-5-55	2
8-72x,73x	ZS608264	Screw, Pan Head 3x25		4
8-74	ES250064	Micro Switch V-1A44 U/L	25-1-7	1
8-75	MZ402377	Micro Insulator D	KD-2060	1
8-76	ML643252	Stop Lever A, w/pin	NE-1028	1
8-77	MZ643274	Reset Slide B	NE-1022	1
8-78	MZ643263	Reset Slide A	NE-1021	1
8-79	ZG669543	Reset Spring (2)	NE-1070	1
8-80x	MZ640023	Plunger Base	NE-1032	1
8-81	EP665087	Plunger Solenoid 1240PHT1	44-1-79	1
8-82x	ED570295	Silicon Diode 1N4003	45-2-61	1
8-83	ZS422076	Screw, Pan Head 3x5		2
8-84	MZ529650	Reverse Joint D	ND-1059	1
8-85	ML640001	D Switch Lever	NE-1030	1
8-86x	ZS417216	Screw, Pan Head 3x4		2
8-87x	MH257477	Connecting Pin	RD-211	1
8-88x	ZW270088	'E' Ring 1.9mm	6-1-9	1
8-89	MZ527883	Reverse Joint B	ND-1021	1
8-90	ML640091	Reverse Lever D, w/pin	NE-1040	1
8-91	MZ640045	D Lamp Table	NE-1035	2
8-92x	EA642598	Lamp P.C Board	NE-1047	2
8-93	EL621167	Pilot Lamp 5.5V 60mA	28-2-38	2
8-94	MZ642533	Reverse Slide, w/pin	NE-1054	1
8-95x	MZ669532	Cushion, Prevention Shock	NE-1069	1
8-96	ZG643285	Reset Spring	NE-1023	1
8-97	MZ643173	Pause Arm B	NE-1012	1
8-98	ZW393851	Washer, (Nylon) D8.1x13x0.8t		1
8-99	ZW334653	'E' Ring 7mm		1
8-100x	ZW274026	Spring Washer M5		1
8-101	ZG580768	Spoke Spring	TD-2077	1
8-102	MZ643320	Intermittently Slide, w/pin	NE-1027	1
8-103	ZW383635	Washer, (Polyslider) D4.2x7x0.25t		2
8-104	MZ640067	Stopper	NE-1037	2
8-105	MZ810191	Cushion Rubber, RD	RD-278	2
8-106	MZ643162	Pause Arm A	NE-1011	1
8-107	ZW270134	'E' Ring 5mm	6-1-9	1
8-108	MZ640080	Quick Plate	NE-1039	1
8-109	ZW270088	'E' Ring 1.9mm	6-1-9	1
8-110	ZG232121	Tension Lever Spring	MH-143	1
8-111	ZG640124	P Spring	NE-1049	1
8-112	ZW270156	'E' Ring 6mm	6-1-9	1
8-113	ML643206	QT Lever A, w/pin	NE-1015	1
8-114	MZ643228	QT Joint	NE-1017	1
8-115	ML643217	QT Lever B	NE-1016	1
8-116x	ZS417261	Screw, Pan Head 3x4		1
8-117x	MZ640326	Frame Shield	NE-1044	1
8-118	ZG527938	FF Reset Spring	ND-1024	1
8-119	EC638875	MP/C. (Lug Type) UN1/D. 4μFx 2 250WV AC	24-9-97	1
8-120x	EC642690	MP/C. (Lug Type) 2+3μF 250V AC (CSA)	24-9-102	1
8-121x	ZS325495	Tapping Screw, #2 3x6BR		2
8-122	MZ640056	Counter Base	NE-1036	1
8-123	MC638684	Counter MP490-23	9-1-43	1
8-124x	EC364858	Elect./C. (Lug Type) 330μF 160WV	24-10-56	1
8-125x	EF563703	Fuse 2A 250V	39-1-50	1
8-126x	ZS325495	Tapping Screw #2 3x6BR		10
8-127	MP275984	Pinch Roller RD D=40	RD-221	1
8-128	ZS642723	Lamp Cover A	NE-6023	2
8-129	ZS527681	Pinch Roller Set Screw	ND-6019	1

When ordering parts, please describe Parts Number, Serial Number, and Model Nuber in detail.

9 P.C BOARDS

(1) P.B AMP P.C BOARD (NE-5036) BLOCK

Symbol No.	Parts No.	Description	Q'ty
(1)-1	BA636862	P.B Amp P.C Board Comp. (NE-5036)	1
(1)-TR1,2	ET234854	Transistor 2SC458LG(C)	4
(1)-TR3	ET398711	Transistor 2SC945(Q)(R)	2
(1)-TR4	ET234854	Transistor 2SC458LG(C)	2
(1)-TR5,6	ET398711	Transistor 2SC945L(Q)(R)	4
(1)-D1	ED219464	Germanium Diode 1N34A	2
(1)-T1	BT517274	Head Phone Trans. N16-535S	2
(1)-VR1	EV622056	Co-Axial 2-Throw Vol. V24L5GPHN 10kB x2	1
(1)-VR2	EV464220	Semi-Fixed/Vol. V8K4-1 50kB	2
(1)-VR3	EV464196	Semi-Fixed/Vol. V8K4-1 2kB	2
(1)-L1	EO624857	Inductor GE6070A 23mH	2
(1)-P1	EZ623878	Pin For V Connector, w/base RTB-1.5-4	1
(1)-2	EJ539662	Wrapping Post 1x17	26
		Capacitor, Vertical Type	
(1)-C1	EC320040	Elect. 47μF 16WV	2
(1)-C2	EC432810	Elect. 10μF 16WV NL	2
(1)-C3	EC290520	VFM 100pF(J) 50WV	2
(1)-C4	EC467133	VFM 68pF(J) 50WV	2
(1)-C5	EC329771	Elect. 47μF 6.3WV	2
(1)-C6	EC290531	VFM 100pF(K) 50WV	2
(1)-C7	EC517138	Elect. 10μF 25WV NL	2
(1)-C8	EC329771	Elect. 47μF 6.3WV	2
(1)-C9	EC389485	Mylar 0.018μF(J) 50WV	2
(1)-C11	EC379787	Mylar 0.0039μF(J) 50WV	2
(1)-C12	EC424708	Mylar 0.0018μF(J) 50WV	2
(1)-C13	EC320051	Elect. 10μF 16WV	2
(1)-C14	EC220590	Elect. 33μF 10WV	2
(1)-C15	EC290564	VFM 220pF(K) 50WV	2
(1)-C16	EC450055	Elect. 1μF 25WV	2
(1)-C17	EC220678	Elect. 47μF 25WV	2
(1)-C18	EC329771	Elect. 47μF 6.3WV	2
(1)-C19	EC556525	FM 22pF(K) 500WV	2
(1)-C20	EC290531	VFM 100pF(K) 50WV	2
(1)-C21	EC320051	Elect. 10μF 16WV	2
(1)-C22	EC220364	Elect. 100μF 6.3WV	2
(1)-C23	EC389474	Mylar 0.0015μF(J) 50WV	2
(1)-C24	EC450055	Elect. 1μF 25WV	2
(1)-C25	EC320051	Elect. 10μF 16WV	2
(1)-C26	EC350706	Elect. 4.7μF 16WV	2

Carbon Resistor Omitted

(2) REC AMP P.C BOARD (NE-5037) BLOCK

Symbol No.	Parts No.	Description	Q'ty
(2)-1	BA636873	Rec Amp P.C Board Comp. (NE-5037)	1
(2)-TR1to4	ET234854	Transistor 2SC458LG(C)	8
(2)-TR5to7	ET398711	Transistor 2SC945(Q)(R)	4
(2)-TR8,9	ET399846	Transistor 2SC945(Q)	1
(2)-VR1,2	EV622078	Double Vol. V24L5DPHN 50kA x 2	2
(2)-VR3	EV464207	Semi-Fixed/Vol. V8K4-1 5kB	2
(2)-VR4,5	EV520806	Semi-Fixed/Vol. V8K4-1 10kB	4
(2)-SW1,2	ES494302	Slide Switch CL104B	2
(2)-SW3	EC520795	Slide Switch CL204EO	1
(2)-L1	EO321254	Ferri Inductor FL7H 5.6mH(J)	2
(2)-T1	EO383365	OSC Coil OT-204	1
(2)-TC1,2	EC558202	Trimmer/C. TM-80A	4
(2)-P1	EZ624071	Pin For V Connector, w/base RTB-1.5-6	1
(2)-2	EJ539662	Wrapping Post 1x17	23
		Capacitor, Vertical Type	
(2)-C1	EC290531	VFM 100pF(K) 50WV	2
(2)-C2	EC220678	Elect. 47μF 25WV	2
(2)-C3	EC432810	Elect. 10μF 16WV NL	2
(2)-C4	EC250604	Mylar 0.001μF(K) 50WV	2
(2)-C5	EC220386	Elect. 100μF 6.3WV	2
(2)-C6	EC556525	FM 22pF(K) 500WV	2
(2)-C7	EC394918	VFM 33pF(K) 50WV	2
(2)-C8	EC432810	Elect. 10μF 16WV NL	2
(2)-C9	EC329771	Elect. 47μF 6.3WV	2
(2)-C10	EC450055	Elect. 1μF 25WV	2
(2)-C11	EC357827	VFM 50pF(K) 50WV	2
(2)-C12	EC329771	Elect. 47μF 6.3WV	2
(2)-C13	EC357827	VFM 50pF(K) 50WV	2
(2)-C14	EC290520	VFM 100pF(J) 50WV	2
(2)-C15	EC333562	Mylar 0.18μF(K) 50WV	2
(2)-C16	EC329771	Elect. 47μF 6.3WV	2
(2)-C17	EC320051	Elect. 10μF 16WV	2
(2)-C18	EC220678	Elect. 47μF 25WV	2
(2)-C19	EC333562	Mylar 0.18μF(K) 50WV	2
(2)-C20	EC320051	Elect. 10μF 16WV	2
(2)-C21	EC220994	Elect. 10μF 25WV	2
(2)-C22	EC405898	Styrol 470pF(J) 50WV	2
(2)-C23	EC250885	Mylar 0.01μF(K) 50WV	2
(2)-C24	EC250841	Mylar 0.01μF(J) 50WV	1
(2)-C25	EC250841	Mylar 0.01μF(J) 50WV	1
(2)-C26	EC220994	Elect. 10μF 25WV	1
(2)-C27	EC558235	Styrol 1800pF(J) 250WV	1
(2)-C28	EC250885	Mylar 0.01μF(K) 50WV	1
(2)-C29	EC220151	Elect. 100μF 25WV	2

Carbon Resistor Omitted

When ordering parts, please describe Parts Number, Serial Number, and Model Nuber in detail.

(3) SERVO CONTROL P.C. BOARD (MY-2036) BLOCK

Symbol No.	Parts No.	Description	Q'ty
(3)-1	BA636748	Servo Control P.C Board Comp. (MY-2036)	1
(3)-TR1,2	ET639437	Transistor 2SC945L(P)(Q)	2
(3)-TR3,4	ET399846	Transistor 2SC945(Q)	2
(3)-TR5	ET538154	Transistor 2SA564(Q)(R)	1
(3)-TR6	ET399846	Transistor 2SC945(Q)	1
(3)-TR7	ET623867	Transistor 2SD361(D1)(D2)	1
(3)-TR8	ET639437	Transistro 2SC945L(P)(Q)	1
(3)-VR1	EV621955	Semi-Fixed Vol. V10K8-1-5 10kB	1
(3)-VR2	EV621966	Semi-Fixed Vol. V10K8-1-5 30kB	1
(3)-D1	ED557447	Silicon Diode 1S1588	1
(3)-D2to5	ED224548	Silicon Diode 10D2	4
(3)-TH1	ED593357	Thermister 34D21	1
(3)-R20	ER593346	Cement/R. (Wire-Wound Type) 2W 330Ω(K)	1
(3)-2	ZS421806	Screw, Pan Head 3x8	1
(3)-3	ZW273756	Nut M3	1
(3)-4	EZ615047	Heat-Sink Plate A	1
(3)-5	ZS422076	Screw, Pan Head 3x5	2
(3)-6	MZ640315	Servo Holder	1
(3)-7	ZS422076	Screw, Pan Head 3x5	4
		Capacitor, Vertical Type	
(3)-C1	EC251291	Mylar 0.1μF(K) 50WV	1
(3)-C2	EC251122	Mylar 0.027μF(K) 50W V	1
(3)-C3	EC250582	Mylar 0.0033μF(K) 50WV	1
(3)-C4	EC331828	Elect. 3.3μF 25WV	1
(3)-C5	EC251122	Mylar 0.027μF(K) 50WV	1
(3)-C6	EC250582	Mylar 0.0033μF(K) 50WV	1
(3)-C7	EC311793	Mylar 0.012μF(K) 50WV	1
(3)-C8	EC557166	Solid Aluminum 3.3μF 25WV	1
(3)-C9	EC450055	Elect. 1μF 25WV	1
(3)-C10	EC320051	Elect. 10μF 16WV	1
(3)-C11	EC220151	Elect. 100μF 25WV	1
(3)-C12	EC250885	Mylar 0.01μF 50WV	1
(3)-C13	EC346735	Elect. 47μF 50WV	1

Carbon Resistor Omitted

(4) POWER SUPPLY P.C BOARD (NE-1048) BLOCK

Symbol No.	Parts No.	Description	Q'ty
(4)-1	BA636737	Power Supply P.C Board Comp. (NE-1048)	1
(4)-TR1	ET398711	Transistor 2SC945L(Q)(R)	1
(4)-TR2	ET511694	Transistor 2SC1211(D)(E)	1
(4)-TR3	ET537300	Transistor 2SD361(D)(E)	1
(4)-R1	ER517094	Metal Oxide Film/R. 2W 330Ω (K)	1
(4)-VR1	EV554670	Semi-Fixed Vol. V10K8-1-5 1kB	1
(4)-CR1to10	ER376435	Spark Quencher U/L 0.1μF+120Ω 250WV	10
(4)-RL1	EP638763	Relay MY4-0-US DC24V	1
(4)-D1	ED624903	Silicon Diode 1S2473	1
(4)-D2to7	ED560913	Silicon Diode 1S2473 VE	6
(4)-D8	ED357794	Zener Diode RD-5A(M)	1
(4)-D9to12	ED511097	Silicon Diode 1N4001	4
(4)-D13to15	ED570295	Silicon Diode 1N4003	3
(4)-2	MZ640102	Sys. Con. Holder A	1
(4)-3	MZ640113	Sys. Con. Holder B	1
(4)-4	ZS325495	Tapping Screw #2 3x6 BR	2
(4)-5	EZ626894	Heat-Sink Plate B	1
(4)-6	ZS421806	Screw, Pan Head 3x8	1
(4)-7	ZW273756	Nut M3	1
(4)-8	ZS417216	Screw, Pan Head 3x4	2
		Capacitor, Vertical Type	
(4)-C1	EC450281	Elect. 0.47μF 50WV	1
(4)-C2,3	EC220151	Elect. 100μF 25WV	1
(4)-C4	EC220678	Elect. 47μF 25WV	1
(4)-C5	EC313121	Elect. 220μF 25WV	1
(4)-C7	EC372148	Elect. 220μF 35WV	1
(4)-C8	EC565345	Elect. 100μF 50WV	1
(4)-C9	EC564952	Elect. 470μF 50WV	1

Carbon Resistor Omitted

(5) EQUALIZER SWITCH P.C BOARD (NE-5038) BLOCK

Symbol No.	Parts No.	Description	Q'ty
(5)-1	BA636884	Equalizer Switch P.C. Board Comp. (NE-5038)	1
(5)-L1	EO369178	Ferri Inductor FL7H 1.5mH(J)	2
(5)-L2	EO380564	Feeri Inductor FL7H 1.8mH(J)	2
(5)-SW1	ES494302	Slide Switch CL104B	2
(5)-SW2	ES496642	Slide Switch CL106B (CL162A25)	1
(5)-2	EJ539662	Wrapping Post 1x17	19
		Capacitor, Vertical Type	
(5)-C1	EC329861	Mylar 0.027μF(J) 50WV	2
(5)-C2	EC368335	Mylar 0.022μF(J) 50WV	2
(5)-C3	EC379214	Mylar 0.047μF(J) 50WV	2
(5)-C4	EC379157	Mylar 0.033μF(K) 50WV	2

Carbon Resistro Omitted

(6) RESISTOR P.C BOARD (NE-1046) BLOCK

Symbol No.	Parts No.	Description	Q'ty
(6)-1	BA636772	Resistro P.C Board Comp. (NE-1046)	1
(6)-2	BA636783	Resistor P.C. Board Comp. (NE-1046)(CSA)	1
(6)-D1	ED570295	Silicon Diode 1N4003	1
(6)-3	MZ528164	Resistor Mt. Metal Fitting	1
(6)-4	ZS325495	Tapping Screw, #2 3x6 BR	4
(6)-R1	ER554905	Cement/R. (Wire-Wound Type) 5W 12Ω(K)	1
(6)-R2	ER638774	Cement/R. (Wire-Wound Type) 10W 82Ω(K)	1
(6)-R2	ER649978	Cement/R. (Wire-Wound Type) 5W 250Ω(K) (CSA)	1
(6)-R3	ER638785	Cement/R. (Wire-Wound Type) 10W 22Ω(K)	1
(6)-R4	ER651317	Cement/R. (Wire-Wound Type) 5W 220Ω(K)	1
(6)-R4	ER649967	Cement/R. (Wire-Wound Type) 10W 39Ω(K) (CSA)	1
(6)-C1,2	EC565885	MP/C. (Tub. Type) 0.47μF(M) 250WV AC	2

10 ILLUSTRATION OF AMP ASSEMBLY BLOCK

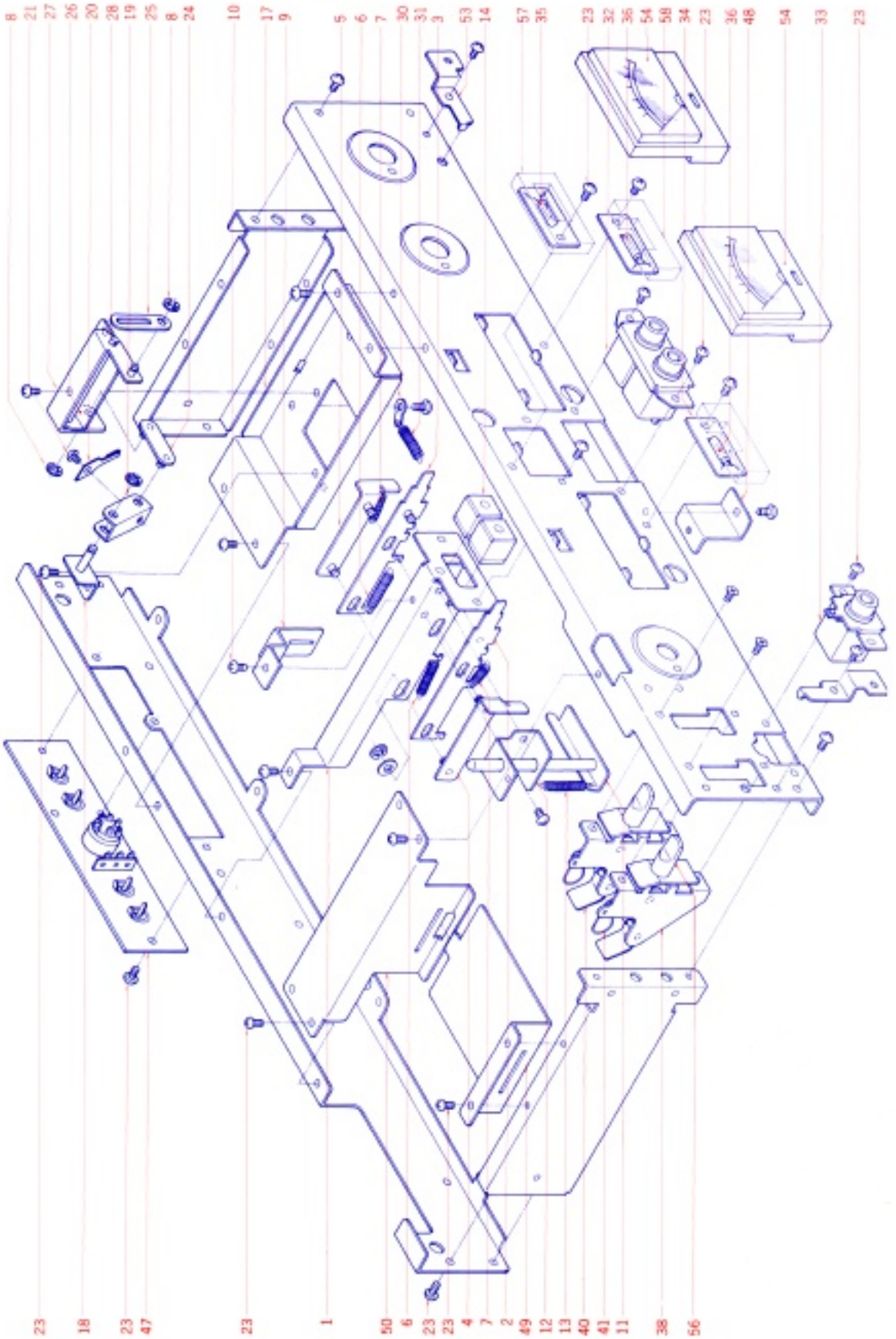

10) AMP ASSEMBLY BLOCK

Ref. No.	Parts No.	Description	Schematic No.	Q'ty
		REC LEVER BLOCK		
10-1	MZ643860	Recording Lever Base	NE-5014	1
10-2	ML643915	Recording Lever A, w/pin	NE-5015	1
10-3	ML639033	Recording Lever B, w/pin	NE-5015	1
10-4	ML643926	Recording Lever C, w/pin	NE-5016	1
10-5	ML639101	Recording Lever D, w/pin	NE-5016	1
10-6	ZG643037	Recording Lever Spring A	NE-5021	2
10-7	ZG643026	Recording Lever Spring B	NE-5022	2
10-8	ZW270101	'E' Ring 3M	6-1-9	9
10-9	MZ643937	Stopper	NE-5017	1
10-10	ZS417216	Screw, pan head 3x4		3
10-11	MZ643950	Lock Plate, w/con rod	NE-5019	1
10-12	MZ643961	Rod Stand	NE-5020	1
10-13	ZG643015	Lock Spring	NE-5023	1
10-14	SK643004	Rec Knob	NE-5024	2
10-15x	ZW601075	Washer D4.1x7x0.1t		2
10-16x	ZW322525	Washer (PBP) D4.1x7x0.2t		2
		REVERSE LEVER BLOCK		
10-17	MZ642993	Reverse Lever Table	NE-5025	1
10-18	MZ642936	Lever Holder B, w/pin	NE-5031	1
10-19	ML642960	Reverse Lever G	NE-5028	1
10-20	ZG642914	Reverse Spring	NE-5033	1
10-21	ZS432674	Screw, pan head 3x3		1
10-22x	ZW290283	'U' Ring 2.85M	6-1-1	1
10-23	ZS325495	Tapping Screw #2 3x6		53
10-24	ML642971	Reverse Lever B, w/pin	NE-5027	1
10-25	MZ655975	Reverse Slide Joint	NE-5041	1
10-26	MZ642958	Lever Holder A	NE-5029	1
10-27	ML642982	Reverse Lever A	NE-5026	1
10-28	MS642947	Reverse Lever Shaft	NE-5030	1
10-29x	ZW653163	Retaining Ring CS Type 3	6-1-14	1
10-30	ZW562476	Earth Lug M3		1
10-31	ZG642903	Reverse Return Spring	NE-5034	1
		AMP CHASSIS BLOCK		
10-32	EJ639292	2-through Jack	31-2-58	1
10-33	EJ639303	Head Phone Jack	31-2-59	1
10-34	EA642598	Lamp P.C. Board	NE-1047	3
10-35	EL619064	Lamp 24V 35MA	38-2-40	1
10-36	EL621167	Pilot Lamp 5.5V 60MA	38-2-36	2
10-37x	EZ642892	Meter Cushion	NE-5039	2
10-38	MZ644040	M Switch Base, w/prop	NE-5007	2
10-39x	ZW270088	'E' Ring 1.9M	6-1-9	2
10-40	MZ644027	M Joint	NE-5009	2
10-41	ZG644016	Return Spring	NE-5010	2
10-42x	ML580408	SW. Lever	TD-2032	2
10-43x	ZW322525	Washer (PBP) D4.1x7x0.2t		2
10-44x	ZW589893	Washer D4.1x7x0.4t		2
10-45x	ZW381881	Washer D4.3x13x1t		2
10-46x	ZS369145	ISO Screw, countersunk head 3x5 D=5		4
10-47	EZ638921	Jack Plate NE	31-5-123	1
		AMP ASSEMBLY BLOCK		
10-48	MZ643994	P.C. Board Holder	NE-5005	1
10-49	EZ643904	EQ Shield Plate	NE-5013	1
10-50	EZ644051	EQ P.C. Board Holer	NE-5013	1
10-51x	EJ639112	9P Plug Housing 103-3-9P	42-1-85	1
10-52x	EJ639145	M Terminal 103-3P9	22-1-64	7
10-53	MZ644005	Panel Mt. Plate	NE-5008	2
10-54	EM558180	VU Meter KL-243S-5	46-1-31	2
10-55x	EZ643871	Amp. Shield	NE-5035	1
10-56	SK638976	Knob 1-C	CP-5018	2
10-57	SZ642723	Lamp Cover A	NE-6021	1
10-58	SZ642802	Lamp Cover B	NE-6022	2

When ordering parts, please describe Parts Number, Serial Number, and Model Nuber in detail.

11 PHOTO OF FINAL ASSEMBLY BLOCK

11) FINAL ASSEMBLY BLOCK

Ref. No.	Parts No.	Description	Schematic No.	Q'ty
		FRONT PANEL BLOCK		
11-1x	BZ636895	Front Panel Block Comp.	NE	1
11-2	SP643364	Panel	NE-6001	1
11-3	SC642745	Head Cover Base	NE-6002	1
11-4x	MZ642881	Pinch Roller Mask	NE-6003	1
11-5x	ZW447568	Tapping Screw #1 3x6 Truss		2
11-6	SE642870	Panel Escutcheon	NE-6004	2
11-7	SZ639685	Lamp Lens B-1	NE-6005	1
11-8x	SE639674	Rec Knob Escutcheon	NE-6006	1
11-9	SE642767	VU Meter Escutcheon	NE-6014	2
11-10x	ZS379405	ISO Screw, binding head 3x6		8
11-11	SE581602	Reel Table Escutcheon 2	TD-6021	2
11-12	SE613866	Button Escutcheon C	CW-6016	5
11-13	SE626951	Counter Escutcheon	MY-6006	1
11-14x	SE534238	DL Escutcheon	TW-6006	2
		CASE BLOCK		
11-15	BC639088	Case	NE-6016	1
11-16	SZ632070	Square Foot	MY-6026	2
11-17x	SA632081	Rubber Foot	MY-6027	4
11-18x	ZW424980	Tapping Screw #2 4x12 Truss		4
11-19x	SZ480712	Dust Cover Pin	LE-6026	2

Ref. No.	Parts No.	Description	Schematic No.	Q'ty
		FINAL ASSEMBLY BLOCK		
11-20x	SE627120	Ventilater	MX-6014	1
11-21x	SM642835	Jack Name Plate	NE-6013	1
11-22	ZS613901	Panel Screw	CW-6031	6
11-23x	MH642857	Head Cover Prop	NE-6009	2
11-24	SC642734	Head Cover	NE-6007	1
11-25x	MZ642868	Head Cover Support	NE-6008	2
11-26x	SM642756	Head Cover Name Plate NE	NE-6018	1
11-27x	HZ645311	Head Cover Shield	NE-6026	1
11-28	SK646053	Pinch Roller Cap B	ND-6028	1
11-29	SK631078	Double Knob (Upper)	MY-6206	2
11-30	SK631067	Double Knob (Lower)	MY-6207	2
11-31	SK631056	Single Knob	MY-6208	1
11-32x	EF563681	Fuse 1A 250V	39-1-50	1

When ordering parts, please describe Parts Number, Serial Number, and Model Nuber in detail.

12 LIST OF INTERCHANGEABLE SEMICONDUCTORS

As far as service in concerned, in case the original parts cannot be obtained, the interchangeable parts listed below can be substituted.

Original Parts			Interchangeable Parts	
Description	Parts No.	Utilizing P.C Board	Description	Parts No.
2SC458LG (C)	ET234854	NE-5036 NE-5037	2SC693U (F) 2SC1312R (G),(H) 2SC1312S (G),(H)	ET315472 ET610413 ET603257
2SC945L (Q),(R) 2SC945 (P),(Q) 2SC945 (Q)	ET398711 ET478001 ET399846	NE-5036 NE-5037 MY-2036	2SC711 (E),(F) 2SC1647 (R)(S)(E) 2SC1641(Q)(R)(S)(E)	ET453486 ET623733 ET603843
2SC1211 (D),(E)	ET511694	NE-1048	2SC1247A (B),(V)	ET511920
2SD361 (D1),(D2)	ET623867	NE-1048	2SD361 (D),(E) 2SC1061 (B),(C) 2SC1449 (K)(L)(H)	ET537300 ET375603 ET635815
2SA564 (Q),(R)	ET538154	MY-2036	2SA733 (Q),(R) 2SA628 (D),(E) 2SA640 (E),(F)	ET538378 ET538110 ET623790
TIP-48	ET621786		TIP-47	ET621775
RD-5A(M)	ED357794	NE-1048	XZ-049	ED570521
1N4001	ED511097		10D05	ED494583
1N4003	ED570295	See Note-1	10D2	ED224548
1N4003	ED570295	NE-1046 See Note-2	10D4	ED224550

Note-1 Mech Block and Power Supply P.C Board NE-1048

Note-2 Resistor P.C Board NE1046 only

INDEX

Parts No.	Ref. No. & Symbol No.	Parts No.	Ref. No. & Symbol No.	Parts No.	Ref. No. & Symbol No.	Parts No.	Ref. No. & Symbol No.	Parts No.	Ref. No. & Symbol No.
MZ643994	10-48	ZS304806	1-49	ZW270101	5-21				
MZ644005	10-53	ZS323728	1-13	ZW270101	8-9				
MZ644027	10-40	ZS323728	6-25	ZW270101	10-8				
MZ644040	10-38	ZS323728	8-48	ZW270134	8-107				
MZ644062	5-14	ZS325495	(4)-4	ZW270156	8-112				
MZ644106	8-33	ZS325495	(6)-4	ZW273756	1-52				
MZ644196	5-12	zS325495	7-14	ZW273756	(3)-3				
MZ647133	7-17x	ZS325495	7-29x	ZW273756	(4)-7				
MZ652533	8-94	ZS325495	8-121x	ZW273756	8-6x				
MZ655975	10-25	ZS325495	8-126x	ZW273778	3-13x				
MZ669532	8-95x	ZS325495	10-23	ZW274026	8-25x				
MZ802980	8-39	ZS365973	3-18	ZW274026	8-100x				
MZ810191	1-22	ZS369145	10-46x	ZW290283	4-16				
MZ810191	5-15	ZS379350	4-23	ZW290283	6-20				
MZ810191	8-105	ZS379350	6-15	ZW290283	8-54				
SA632081	11-17x	ZS379350	7-27x	ZW290283	10-22x				
SB631146	4-34	ZS379405	11-10x	ZW322525	10-16x				
SB631157	4-35	ZS383951	7-33x	ZW322525	10-43x				
SB631168	4-36	ZS396000	1-26	ZW334653	8-99				
SC642734	11-24	ZS403222	3-20	ZW345442	8-38x				
SC642745	11-3	ZS413201	1-4	ZW374545	6-14				
SE534238	11-14x	ZS413201	1-55x	ZW374545	6-32				
SE581602	11-11	ZS413201	7-9x	ZW381881	10-45x				
SE613866	11-12	ZS413234	2-11	ZW383635	8-103				
SE626951	11-13	ZS413785	1-12	ZW393851	8-98				
SE627120	11-20x	ZS416687	1-6x	ZW396437	1-19				
SE639674	11-8x	ZS417216	4-6	ZW397146	5-23x				
SE642767	11-9	ZS417216	(4)-8	ZW397146	8-67x				
SE642870	11-6	ZS417216	6-19	ZW413188	8-41				
SK597633	2-4	ZS417216	8-32	ZW413278	8-26x				
SK631056	11-31	ZS417216	8-34x	ZW416698	7-8x				
SK631067	11-30	ZS417216	8-46	ZW419646	5-8				
SK631078	11-29	ZS417216	8-86x	ZW419646	5-19x				
SK638976	6-21	ZS417216	8-116x	ZW424495	6-29				
SK638976	10-56	ZS417216	10-10	ZW424980	11-18x				
SK643004	10-14	ZS421806	(3)-2	ZW425002	1-11				
SK644117	6-23	ZS421806	(4)-6	ZW447568	11-5x				
SK646053	11-28	ZS422076	(3)-7	ZW527422	1-46				
SM642756	11-26x	ZS422076	(3)-7	ZW535094	5-29				
SM642835	11-21x	ZS422076	4-24x	ZW562476	1-10				
SM647245	7-34x	ZS422076	5-11	ZW562476	4-31				
SP643364	11-2	ZS422076	5-27	ZW562476	10-30				
SZ480712	11-19x	ZS422076	6-11	ZW589893	10-44x				
SZ632070	11-16	ZS422076	7-26x	ZW597543	2-2				
SZ639685	11-7	ZS422076	8-19x	ZW597622	2-3				
SZ642723	8-128	ZS422076	8-61	ZW601075	5-9				
SZ642723	10-57	ZS422076	8-83	ZW601075	5-20x				
SZ642802	10-58	ZS422965	5-25x	ZW601075	10-15x				
TC515575	6-27	ZS424056	3-19	ZW603775	2-13x				
ZG227452	1-50	ZS424056	7-7	ZW603786	2-12				
ZG232121	1-14	ZS425981	3-16x	ZW622001	8-12x				
ZG232121	6-34	ZS432674	10-21	ZW622012	8-13x				
ZG232121	8-110	ZS444262	8-29	ZW625241	4-22				
ZG255633	3-7	ZS460440	1-30x	ZW625241	6-13				
ZG315011	8-55	ZS461395	1-35x	ZW625241	6-31				
ZG317496	3-15	ZS461395	1-39x	ZW653163	10-29x				
ZG466312	1-31	ZS479474	6-10						
ZG514440	6-28	ZS483502	8-3x						
ZG527477	1-21	ZS483502	8-69x						
ZG527938	8-118	ZS487866	1-47						
ZG529211	8-7	ZS527681	8-129						
ZG567696	6-33	ZS562432	1-32						
ZG580746	5-13	ZS608253	5-24x						
ZG580746	5-28x	ZS608264	8-68						
ZG580768	8-101	ZS608264	8-72x,73x						
ZG640124	8-111	ZS608275	4-25x						
ZG640304	4-26	ZS613901	11-22						
ZG642903	10-31	ZW259738	8-8x						
ZG642914	10-20	ZW270088	3-9						
ZG643015	10-13	ZW270088	4-12						
ZG643026	10-7	ZW270088	6-30						
ZG643037	10-6	ZW270088	8-14x						
ZG643285	8-96	ZW270088	8-22x						
ZG644016	10-41	ZW270088	8-37x						
ZG644095	8-40	ZW270088	8-64x						
ZG644152	4-13	ZW270088	8-88x						
ZG644163	4-32	ZW270088	8-109						
ZG644185	4-14	ZW270088	10-39x						
ZG669543	8-79	ZW270101	1-17						
ZS200395	5-30	ZW270101	5-10						

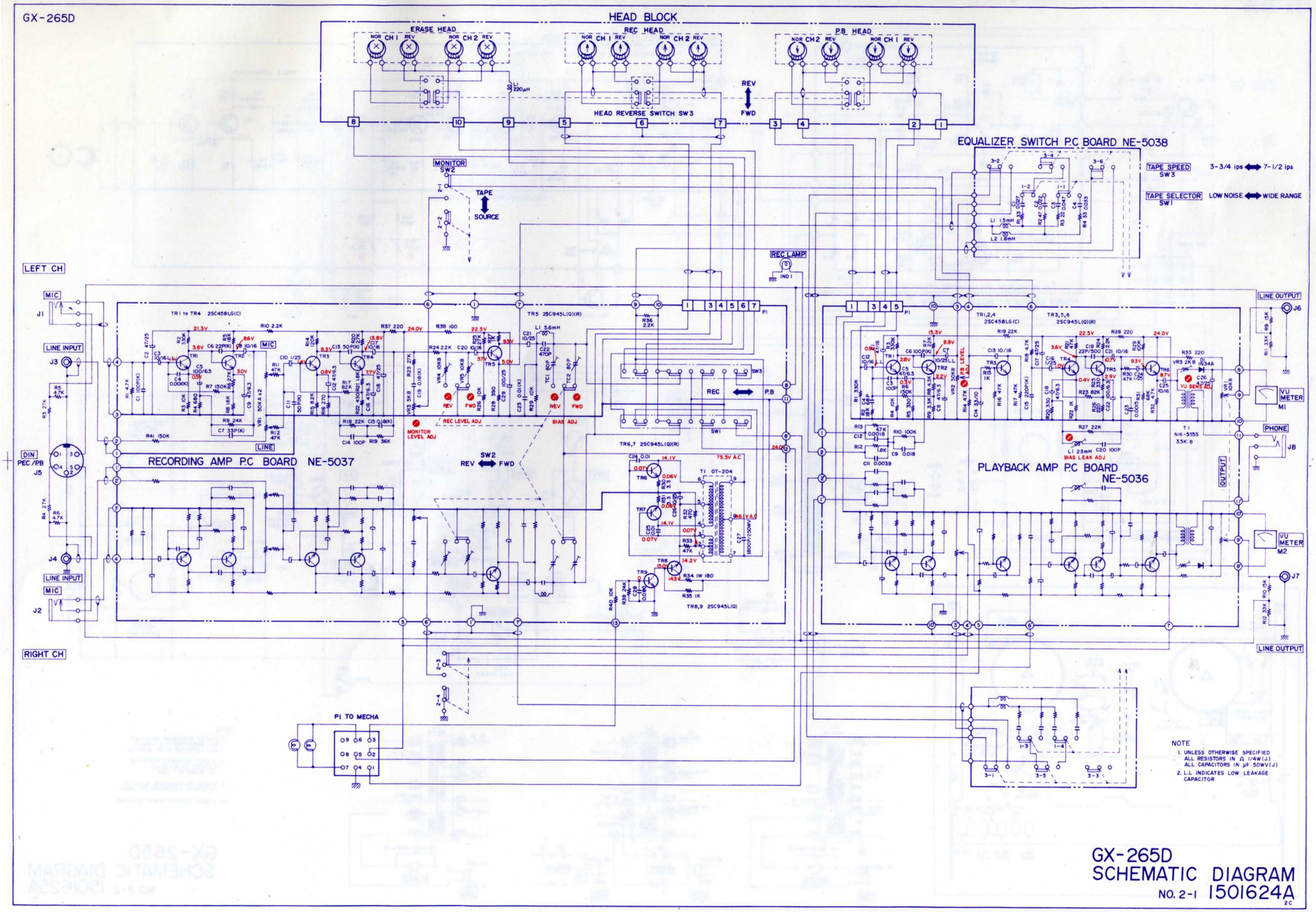

GX-265D SCHEMATIC DIAGRAM

NO. 2-1 1501624A

GX-265D

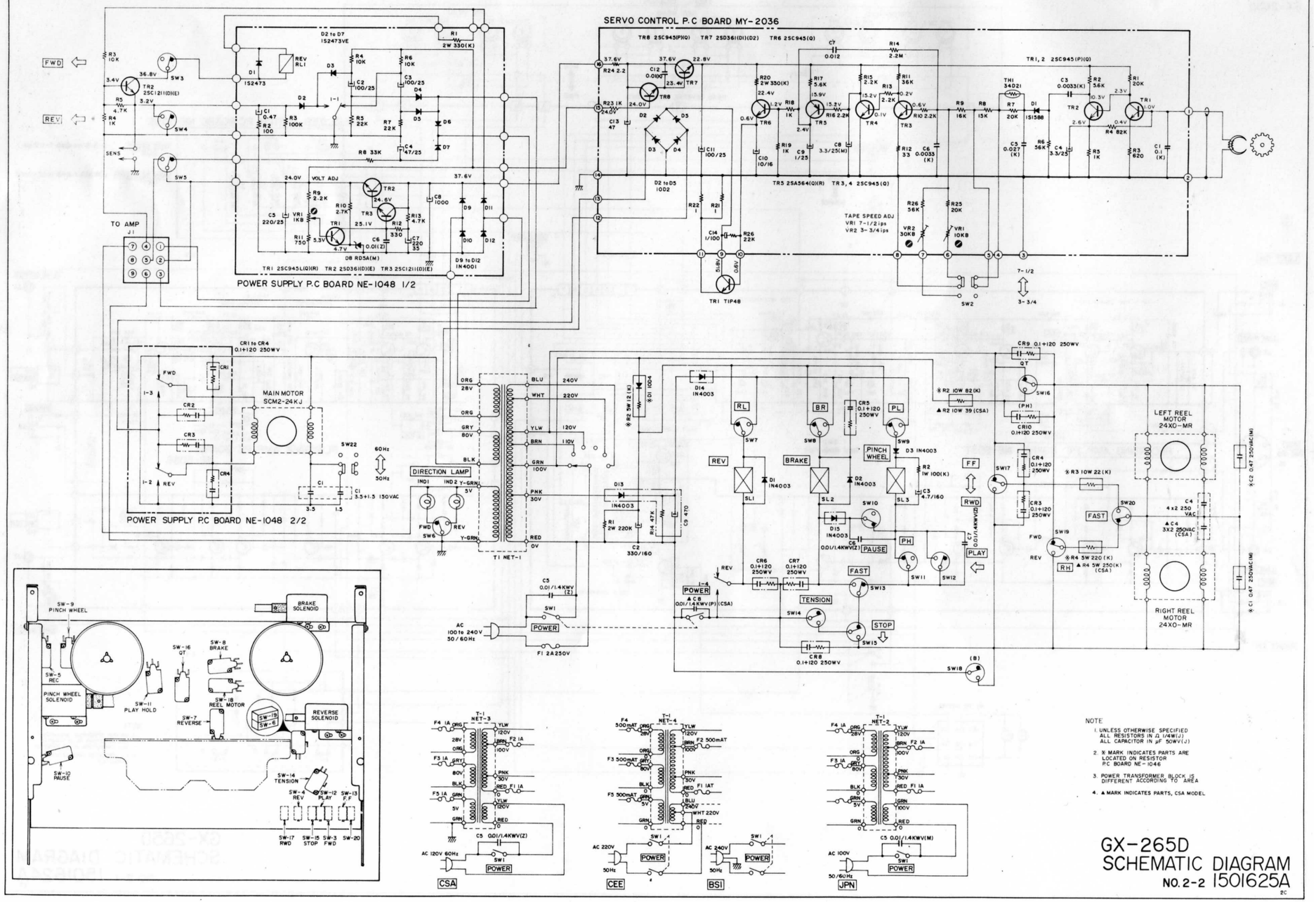

NOTE

1. UNLESS OTHERWISE SPECIFIED ALL RESISTORS IN Ω 1/4W(J) ALL CAPACITOR IN μF 50WV(J)
2. ※ MARK INDICATES PARTS ARE LOCATED ON RESISTOR P.C BOARD NE-1046
3. POWER TRANSFORMER BLOCK IS DIFFERENT ACCORDING TO AREA
4. ▲ MARK INDICATES PARTS, CSA MODEL

GX-265D SCHEMATIC DIAGRAM

NO. 2-2 1501625A

2C